MicroMVA/Micro100
Gas
OPERATORS MANUAL

Flow Computer
Gas Version

11104 W.Airport Blvd, Suite 108
Stafford, Texas 77477 USA
(281) 565-1118
Fax (281) 565-1119

Date: 1/19/2022

WARRANTY

Dynamic Flow Computers warrants to the owner of the Smart Flow Computer that the product delivered will be free from defects in material and workmanship for one (1) year following the date of purchase.
This warranty does not cover the product if it is damaged in the process of being installed or damaged by abuse, accident, misuse, neglect, alteration, repair, disaster, or improper testing.
If the product is found otherwise defective, Dynamic Flow Computers will replace or repair the product at no charge, provided that you deliver the product along with a return material authorization (RMA) number from Dynamic Flow Computers.
Dynamic Flow Computers will not assume any shipping charge or be responsible for product damage due to improper shipping.

THE ABOVE WARRANTY IS IN LIEU OF ANY OTHER WARRANTY EXPRESS IMPLIED OR STATUTORY. BUT NOT LIMITED TO ANY WARRANTY OF MERCHANTABILITY, FITNESS FOR PARTICULAR PURPOSE, OR ANY WARRANTY ARISING OUT OF ANY PROPOSAL, SPECIFICATION, OR SAMPLE.
LIMITATION OF LIABILITY:
DYNAMIC FLOW COMPUTERS SHALL HAVE NO LIABILITY FOR ANY INDIRECT OR SPECULATIVE DAMAGES (INCLUDING, WITHOUT LIMITING THE FOREGOING, CONSEQUENTIAL, INCIDENTAL AND SPECIAL DAMAGES) ARISING FROM THE USE OF, OR INABILITY TO USE THIS PRODUCT. WHETHER ARISING OUT OF CONTRACT, OR UNDER ANY WARRANTY, IRRESPECTIVE OF WHETHER DFM HAS ADVANCED NOTICE OF THE POSSIBILITY OF ANY SUCH DAMAGE INCLUDING, BUT NOT LIMITED TO LOSS OF USE, BUSINESS INTERRUPTION, AND LOSS OF PROFITS. NOTWITHSTANDING THE FOREGOING, DFM'S TOTAL LIABILITY FOR ALL CLAIMS UNDER THIS AGREEMENT SHALL NOT EXCEED THE PRICE PAID FOR THE PRODUCT. THESE LIMITATIONS ON POTENTIAL LIABILITY WERE AN ESSENTIAL ELEMENT IN SETTING THE PRODUCT PRICE. DFM NEITHER ASSUMES NOR AUTHORIZES ANYONE TO ASSUME FOR IT ANY OTHER LIABILITIES

Date: 1/19/2022

CHAPTER 1: QUICK START

Introduction:

The micro MV Gas Flow Computer was designed after careful listening to our customers in all sectors of the oil and gas industry. It was built to address the different needs for refineries, chemical plants, gas processing plants, offshore platforms, pipeline and transmission, remote gas wells, and storage caverns. The focus has been to bring the different needs and requirements of these specialized industries into one hardware platform and therefore reducing the spare parts requirements, the training process, calibration, and overall cost of ownership. We believe the Micro MV Gas Flow Computer has delivered and met the design intentions.

The Micro MV Gas Flow Computer combines the following features:

- User Friendly
- Flexible
- Easy to understand and configure
- Rugged
- Economical to install and maintain
- Accurate

We hope that your experience with the Micro MV Gas Flow Computer will be a simple pleasant experience, not intimidating in any way.

The Micro MV Flow computer handles up to two-meter runs with bi-directional capabilities. It includes the following mass flow equations: New API14.3, Venturi, Annubar, turbine (AGA7), Ultrasonic, V cone, and wedge meter. Additionally, it can perform density calculations per these standard procedures: AGA8, NX19 for gas, NBS1048 for hydrogen and oxygen, NBS for steam, NBS1045 for ethylene, saturated and super-heated steam tables, and other tables are added constantly, call our main office for current equations

One Rosemount multi-variable digital transducers can be connected to each Micro MV flow computer for temperature, pressure (up to 3626 PSIG), and DP (up to 830 inches H_2O). Other Rosemount multi variable transmitters can be connected to the Micro MV Gas Flow Computer via RS485 serial interface. Up to four meter runs can be stored and calculated in a single Micro MV Gas flow computer. The 2nd RS485 is used as a slave or a master Modbus port for data acquisition and other serial functions.

The Micro MV Gas flow Computer has a host of inputs and outputs beyond the built in Rosemount Multi Variable transmitter.

Three turbine inputs (Sine or Square wave), 70 mV peak to peak or sine wave 6 volts, or lighter on square wave

Four additional analog inputs, or two analog inputs and one three wire RTD inputs

One analog output expandable to four

One RS-232 and two RS-485 with Modbus protocol, one serial printer output

4 status inputs or digital outputs are user configurable.

Additionally, each Micro MV Gas Flow Computer can store up to 35 days of hourly and daily data. Optional expandable memory (Virtual Hard Drive) up to 132 Megs ; combined with our customized data storage allows almost any type data logging task to become possible.

Quick Start Up

Version 2 - MicroMV Main/Memory Boards (Micro2009 and Later Model)

Main Board

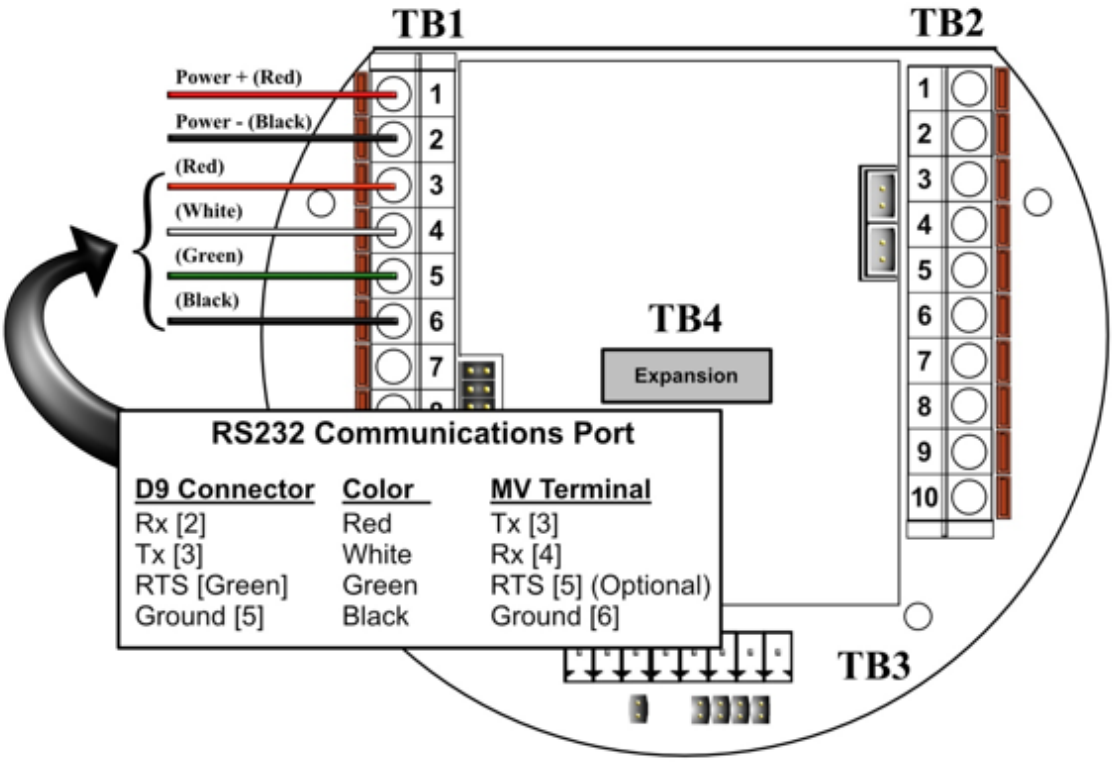

MV Step by Step Startup:

1. Connect power supply cable
2. Connect RS-232 Communications
3. Ensure jumper JP1 is installed on memory board
4. Energize power supply (24 Volts Recommended)
5. Verify display comes on
6. Run DFC Software
7. Configure the Micro MV device

Version 2 - MicroMV Main/Memory Boards (Micro2009 and Later Model)

Memory/CPU Board

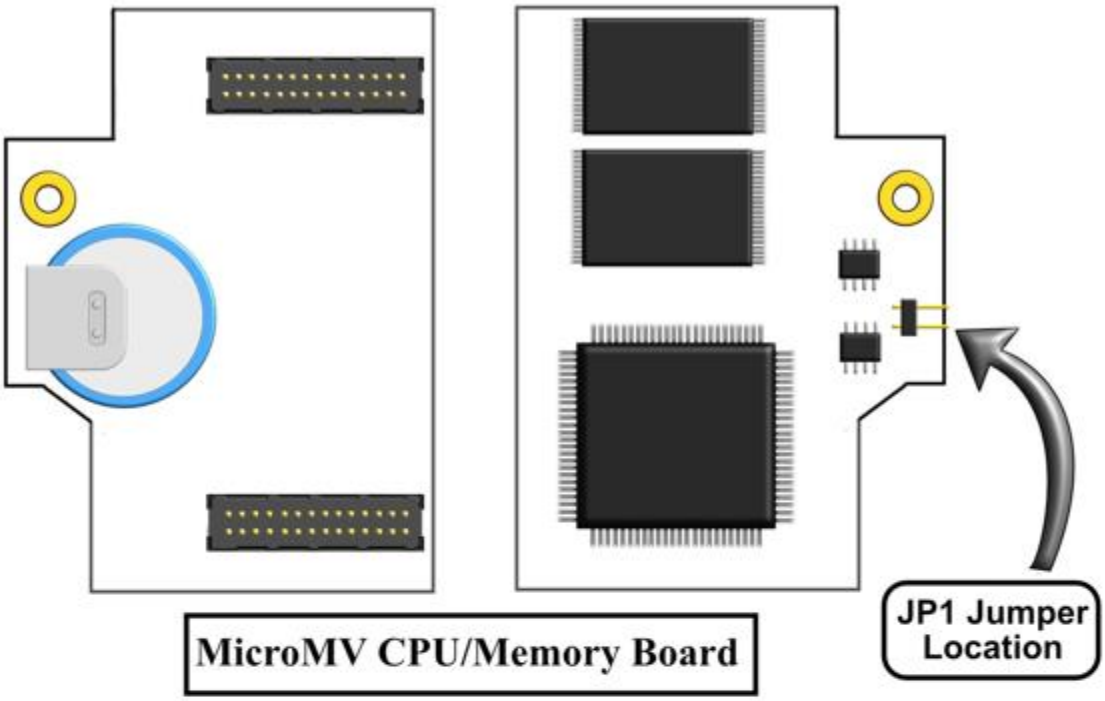

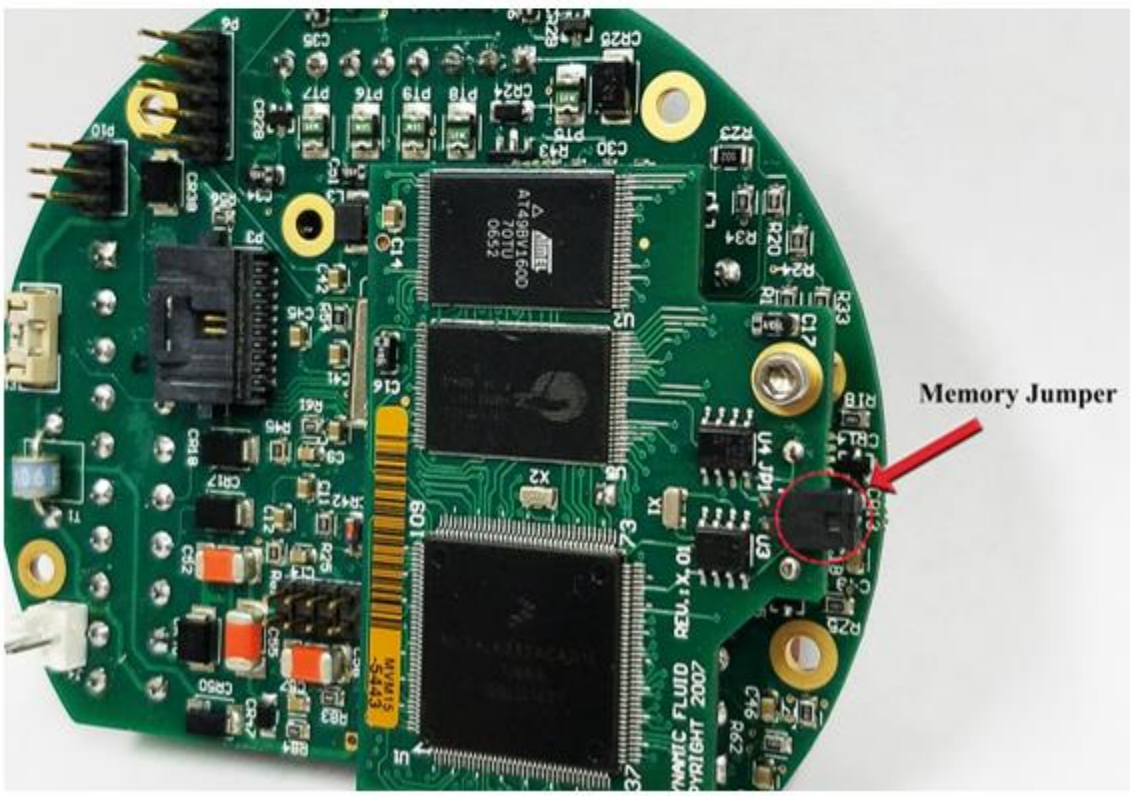

Version 1 - MicroMV Board (Older MicroMV Models)

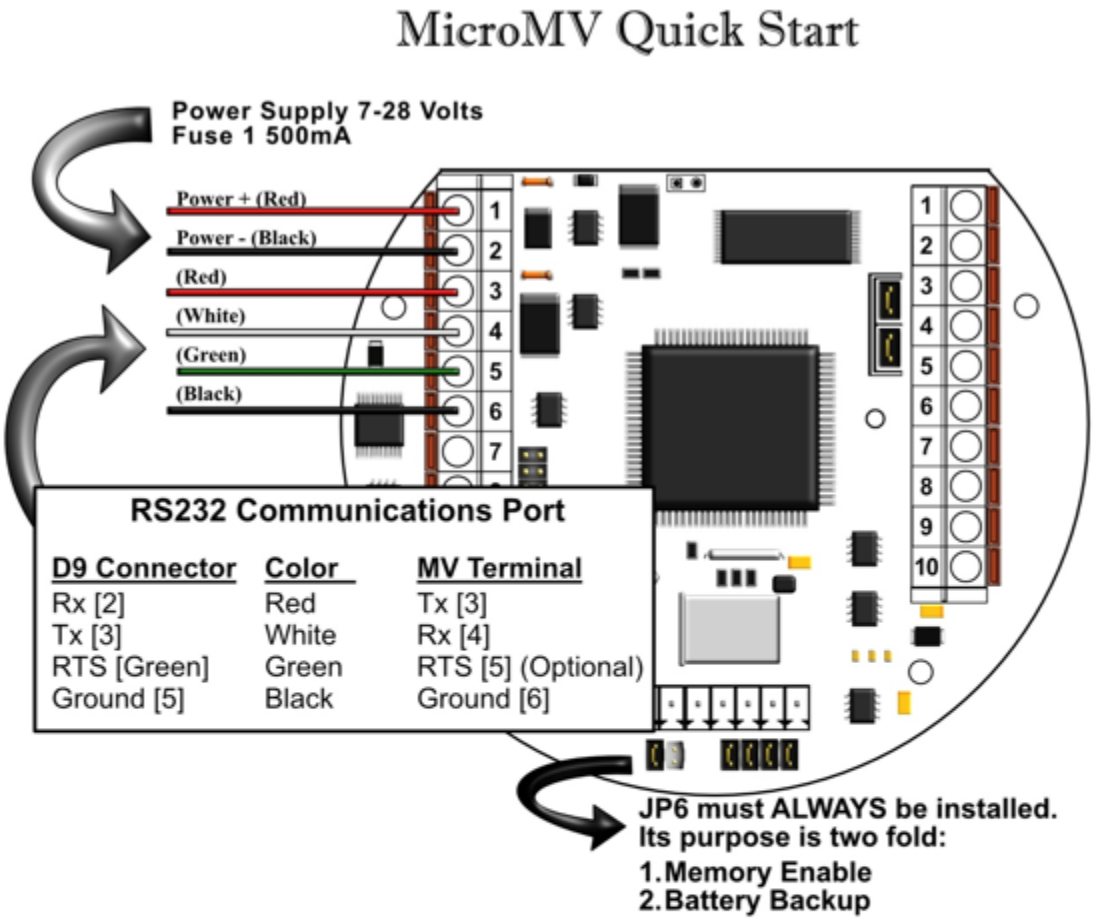

MV Step by Step Startup:

1. Connect power supply cable
2. Connect RS-232 Communications
3. Ensure jumper JP6 is installed
4. Energize voltage (24 Volts Recommended)
5. Verify DynacomTM Software
6. Run DynacomTM Software
7. Configure the Micro MV unit
8. Consult the Faultfinding if a problem is incurred

Version 1 - MicroMV Board (Older MicroMV Models)

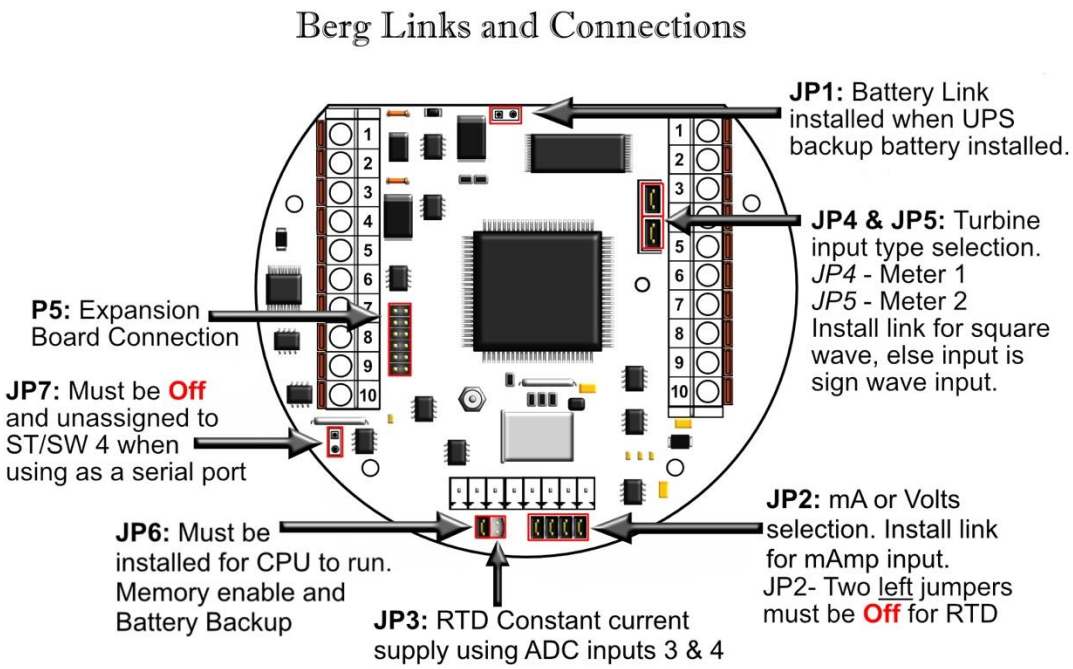

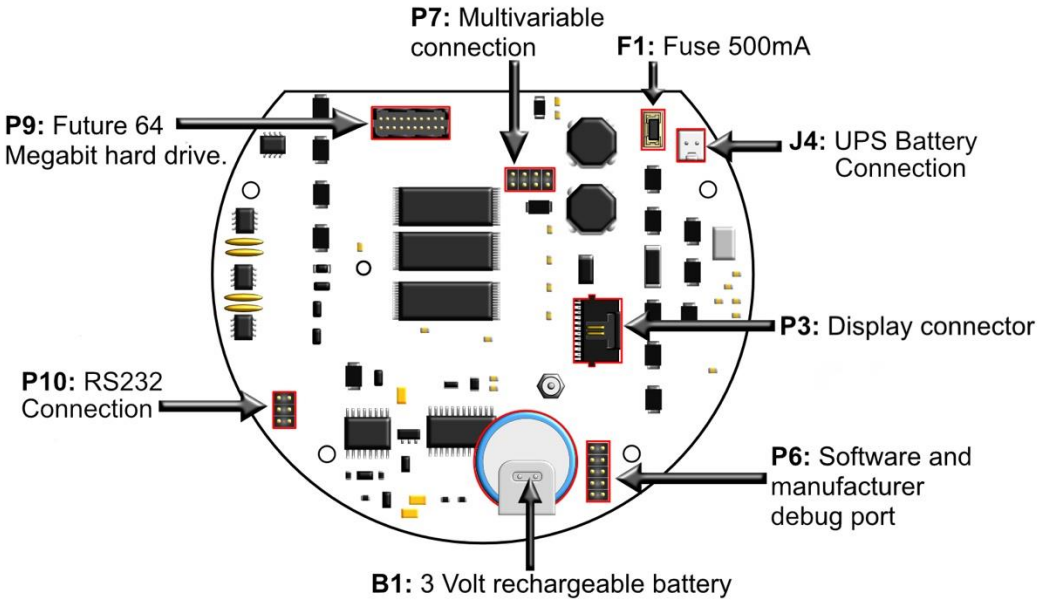

Version 2 - MicroMV Main Board (Micro2009 and Later Model)

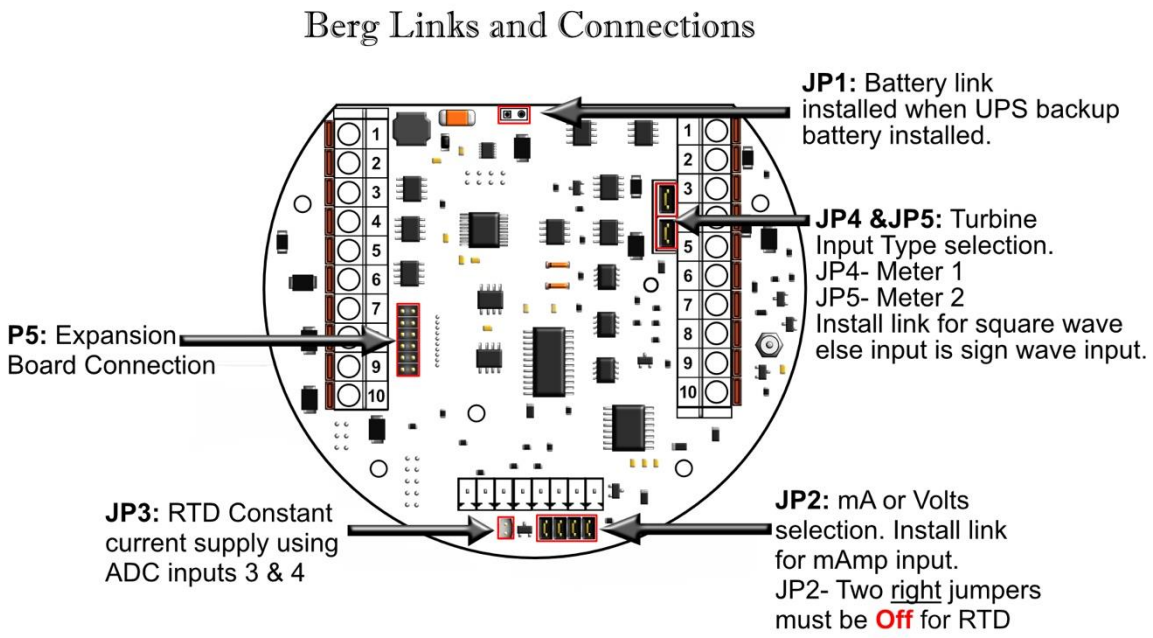

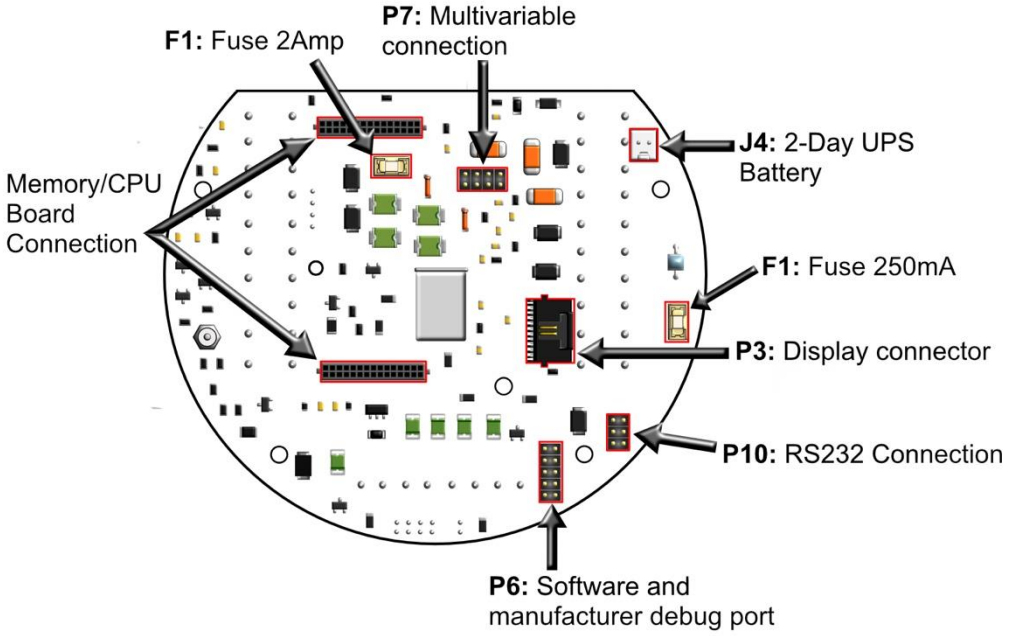

Version 2 - MicroMV Memory/CPU Board

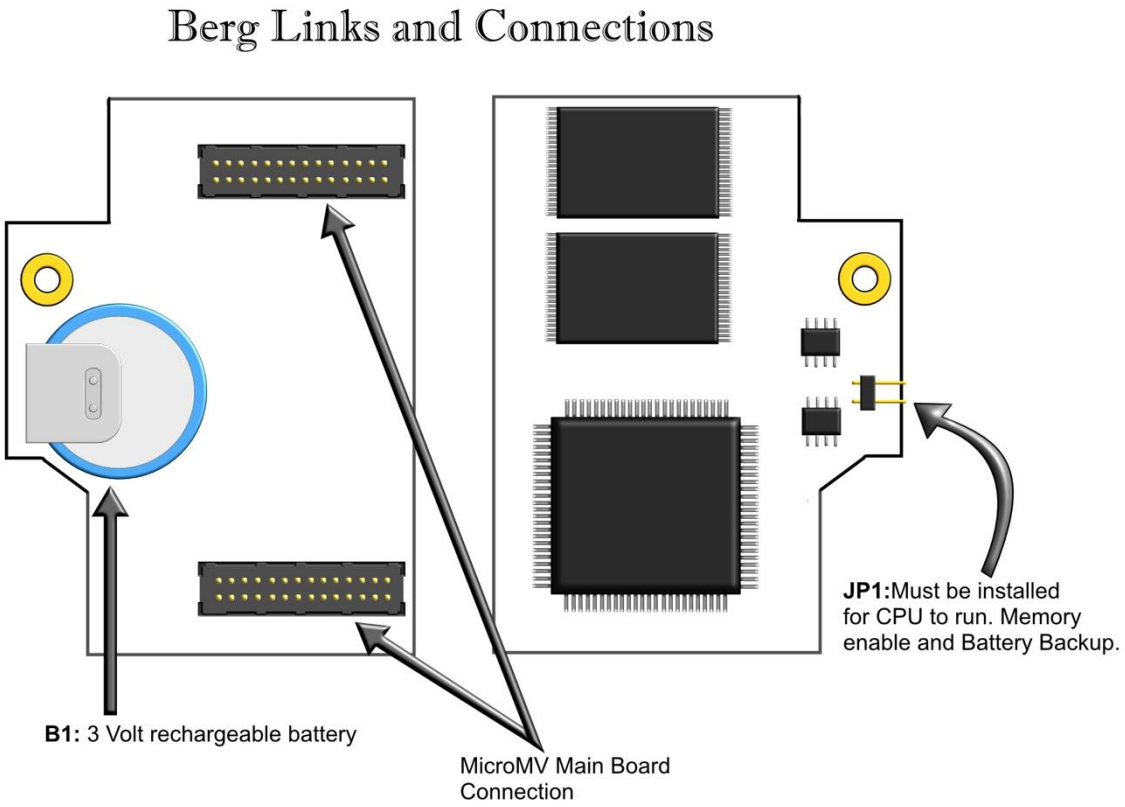

Technical Data

POWER	
VOLTAGE RANGE	7-28 VDC
POWER CONSUMPTION	0.5 WATT
OPERATING CONDITIONS	
TEMPERATURE	- 40 TO 185 °F
HUMIDITY	100%
HOUSING	NEMA 4X CLASS 1 DIV. 1
FEATURES	
DISPLAY	PLASMA 4 LINES 20 CHARACTERS BACKLIT DISPLAY WITH 4 INFRARED REFLECTIVE SENSORS
PROCESSOR	32-BIT MOTOROLA 68332 @ 16.7 MHZ
FLASH ROM	4 MBITS @ 70 NANO SECONDS
RAM	2 MBITS
FREQUENCY INPUT	3 CHANNELS CHANNELS 1 & 2 ARE SINE/SQUARE WAVE CAPABLE CHANNEL 3 IS SQUARE WAVE ONLY SQUARE WAVE RANGE 0 - 6000 HZ SINE WAVE RANGE 0 – 1200 HZ SIGNAL > 40 mV FOR SINE WAVE SIGNAL > 3 VOLTS FOR SQUARE WAVE
ANALOG INPUT	4 INPUTS STANDARD EXPANDABLE UP TO 9 ANALOG INPUTS OR 7 WITH ADDITIONAL 3 WIRE RTD.
MULTIVARIABLE	BUILT-IN ROSEMOUNT MULTIVARIABLE TRANSMITTER WITH DIRECT SPI DIGITAL CONNECTION. MAXIMUM UPDATE SPEED ONCE EVERY 109 MILLISECONDS.
ANALOG OUTPUT	ONE (1) OPTICALLY ISOLATED 16 BITS EXPANDABLE TO FOUR (4)
DIGITAL I/O	4 DIGITAL INPUTS OR OUTPUTS. DIGITAL OUTPUTS HAVE 0.25 AMPS RATING.
SERIAL	2 RS485 @ 19200 BAUDS VARIABLE 1 RS232 @ 9600 BAUDS VARIABLE 1 PRINTER OUTPUT
COMMUNICATION PROTOCOL	MODBUS

Parts List

Spare Parts - Micro MV	
Part #	**Description**
MVC	Micro MV CPU Main Board Only
MVM	Micro MV CPU Mempry Board Only
MVD	Micro MV Display Board
MVI	Micro MV Analog In Board
MVO	Micro MV Analog Out Board
MVP	Micro MV Prover Board
MVR	Micro MV Rosemount Board
S6920	Explosion Proof Housing Unit for Micro MV Flow Computer
Adapter A	Adapter for 0205 Rosemount Transmitter (Accommodates Micro MV Flow Computer)
Bracket-MVD	Bracket for Micro MV Display
Bracket-MVC A	Bracket for Micro MV CPU (Without Analog)
Bracket-MVC B	Bracket for Micro MV CPU (With Analog)
MVD Cable	Micro MV Display Ribbon Cable
O-Ring A	O-Ring Gasket for Micro MV Housing
Fuse A	250 mA Fuse
Fuse B	500 mA Fuse
Fuse C	2 Amp Fuse
Battery A	Replacement Battery for Micro MV Flow Computer (Board Mounted)

Micro MV Flow Computer: Dimensions

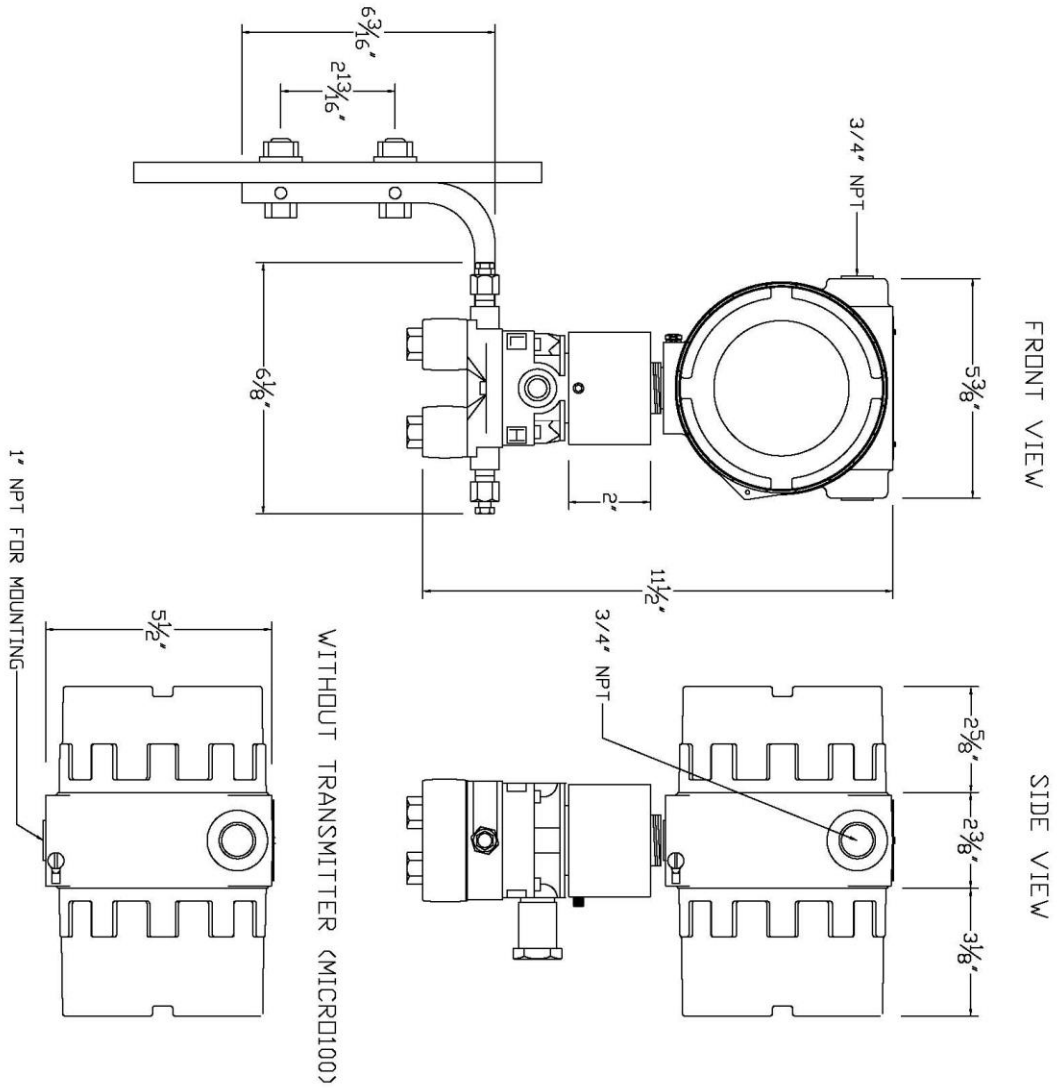

Window Software Minimum Requirements:

Please make sure your computer has the minimum requirements to install Dynamic's Dynacom software.

System Minimum Requirements

In order to install this software product the following requirements must be met:

- Windows Operating System (Win95, Win98, Win98SE, win2000, WinNT, WinXP, Vista, Windows 7, Windows 8, Windows 10)
- For Windows NT, 2000, XP or Vista: Administrator level access to create an ODBC system DNS.
- Minimum disk space available: 16 MB.
- 1 Serial Communication Port

If your computer meets these requirements, you can run the setup file downloaded from our website

What is a configuration file?

The configuration file is an archive that contains the data used by the flow computer to determine calculation settings (Pipe ID, Flow Equation, Meter ID, etc.) and input/output assignments.

Downloading a configuration file to the flow computer.

- Open the configuration file using the **Configuration File | Open…** option on the main menu or pressing the open button in the toolbar. Once the file is open the file name will appear on the upper left corner of the window, so you can verify that the desired file was open.

- Connect to the Flow Computer either by using the **Tools | Connect to Device** option on the main menu, the 

button on the vertical toolbar, or by pressing the **[F5]** key on the keyboard. Once you are connected the application it will show an ONLINE status on the upper right corner of the main window. Failure to communicate can occur because of a communication wiring problem, wrong PC port selection, communication parameter mismatch between PC and MicroMV (Modbus type, parity, baud rate, etc.) or lack of power to the MicroMV Flow Computer. To use **"Tools | Com Settings | Auto Detect Settings"** option, the user must insure that **only one MicroMV** computer is connected to the PC. More than one MicroMV Flow Computer in the loop will cause data collisions and unintelligible responses.

- Go to the configure device option either by using the **Tools | Meter Configuration** option, the 

button on the vertical toolbar, or by pressing the **[F10]** key on the keyboard.

- Because you are connected to a device, a window will appear asking you if you want to read the configuration from the connected meter, Press **NO** since what we want is to write the PC file to the flow computer.

- A configuration window will now appear showing you the information in the configuration file, you can check these values to make sure this is the file you want to send to the flow computer. Once you have checked that the configuration is correct, press the **[Download]** button. A blue bar indicating the progress of the download will appear at the bottom of the application window, after that the information in the configuration file will be in the flow computer.

Note: In case the flow computer is a liquid application, remember to End Batch after the configuration in downloaded for the changes to take effect.

What is an Image File?

An image file is an EPROM code for a certain purpose (liquid, gas, prover, etc.) **The image file is only done when an application upgrade is needed**.

When an image file is downloaded to the flow computer, all the information in the computer is lost (configuration and historical data), so make sure to retrieve all the important information before changing the image file.

How to download an Image File

- Download an image file through **RS232 port** only.
- To Download an Image File to the Flow Computer select the **Tools | Download Program** option form the main menu or press the button in the toolbar.
- A small dialog will appear asking for the file name of the image file (Image file have the extension .img). Type it in or use the **Browse** button to locate it.
- Once the file name is in place press **Download**.
- If a retry message of small dialog appears, try to use **"Tools | Com Settings | Auto Detect Settings"** option, the user must insure that **only one MicroMV** computer is connected to the PC. More than one MicroMV Flow Computer in the loop will cause data collisions and unintelligible responses. Failure to communicate can occur because of a communication wiring problem, wrong PC port selection, communication parameter mismatch between PC and MicroMV (Modbus type, parity, baud rate, etc.) or lack of power to the MicroMV Flow Computer. After the device is detected, then you can follow steps described above.

Warning messages will remind you that this action will erase **ALL** the information in the flow computer.

The download task will take about 7 minutes to be completed. Once the image file is in place, the flow computer is ready to be configured (enter calculation parameters and I/O assignments).

How to force a board into download mode

First, try to recycle the power and reload the image if the error message is displayed while downloading a new image file. Download an image file only through **RS-232 port**. Contact technical support for old boards loaded with downloader v1.
Forcing download mode could be required if a wrong type of application image was loaded or other issues. Call our main office for more information

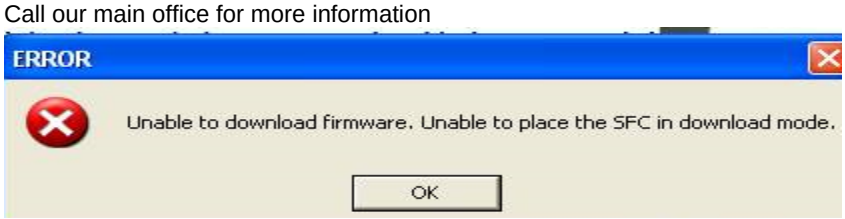

Steps to force the board into download mode.
(1) Remove Power
(2) Put a jumper on P6 as shown below.

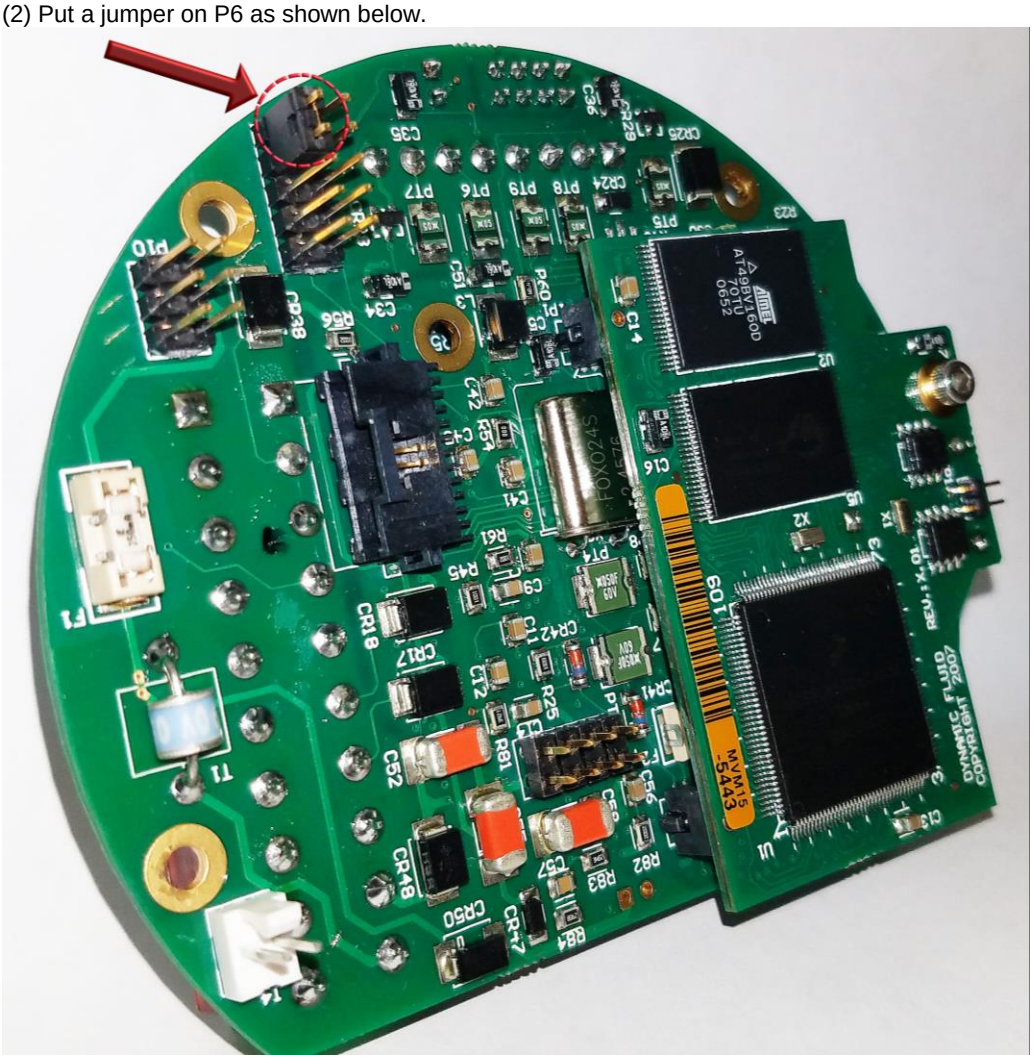

(3) Power up the board
(4) Board is in download mode
(5) Download image
(6) Remove power and jumper on P6 after a new image is loaded
(7) Board is ready

Website - DFC Configuration Software

Step 1. Go to our website WWW.DYNAMICFLOWCOMPUTERS.COM

Step 2. Click on the "**Downloads**"

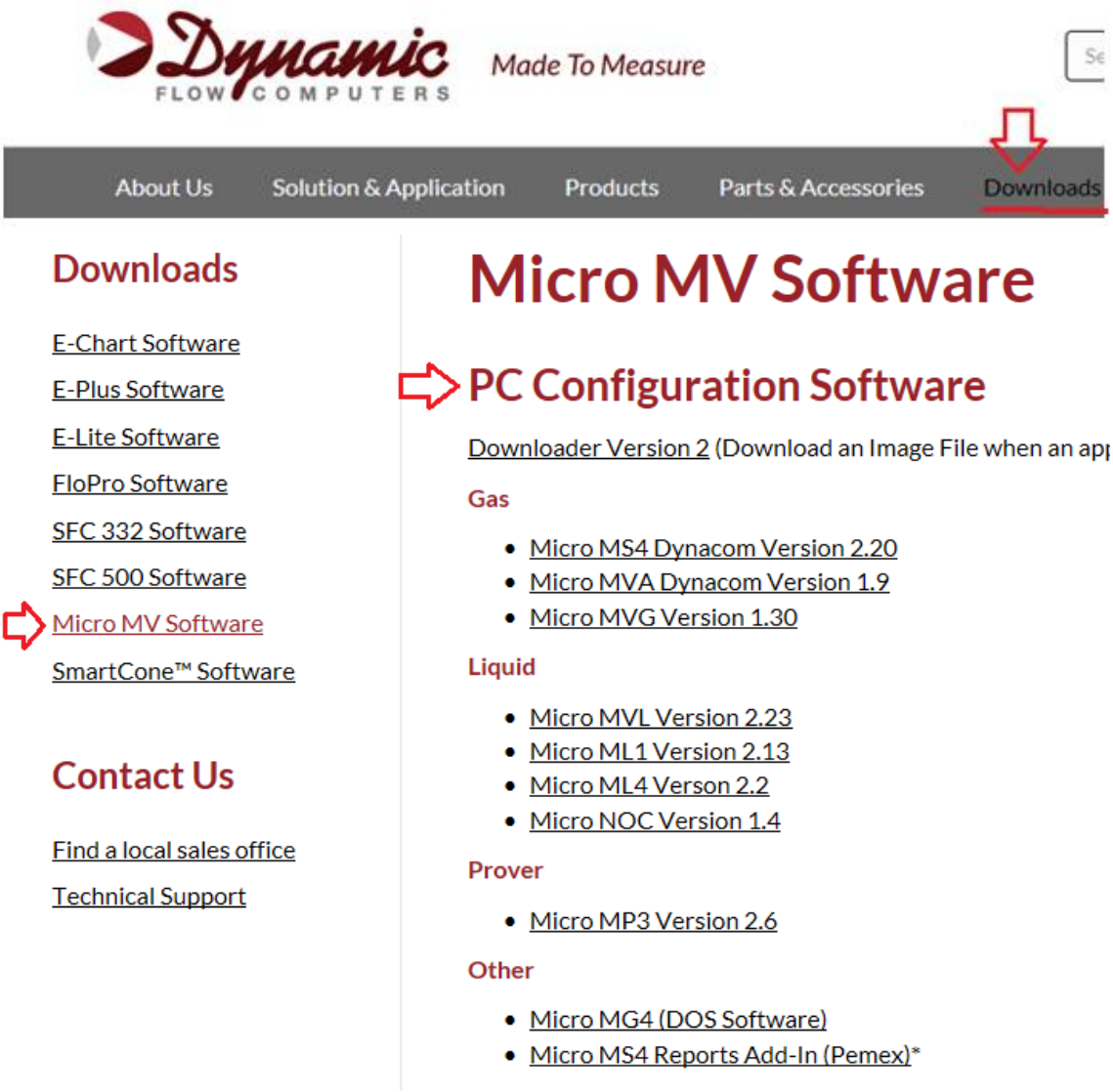

Step 3. Select application software based on Step 2.

Step 4. On the new screen presented to you click on the application that you are trying to download. Once you hit the link it will ask you if you want to run or save the file in your computer. Select **SAVE.** (See illustration 1)

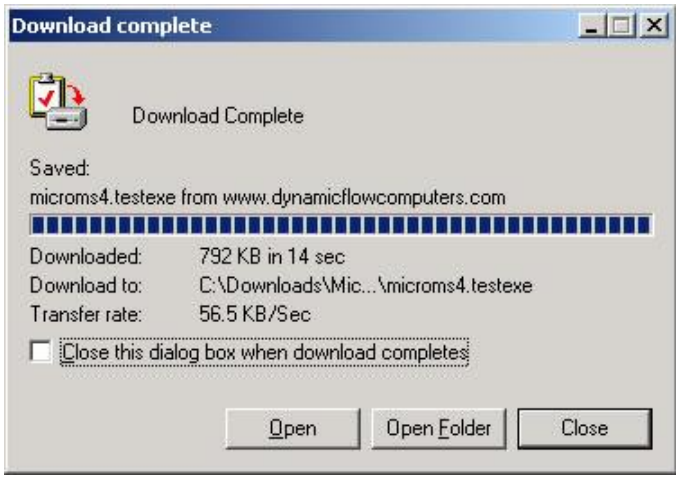

Step 5. The file will start to transfer to your computer. The download time depends on your Internet connection speed and the type of application that being downloaded.

Step 6. When the download if finish. Press the **OPEN** button to start the setup process. (See Illustration)

Step 7. Follow the steps in the application setup.

Website – Image File (Firmware)

Check the version number of image file. **The image file is only done when an application upgrade is needed**.

Step 1. Go to our website WWW.DYNAMICFLOWCOMPUTERS.COM

Step 2. Click on the "**Downloads**"

Step 3. On the new screen presented to you click on the application that you are trying to download. Once you hit the link it will ask you the location and file name to be saved.

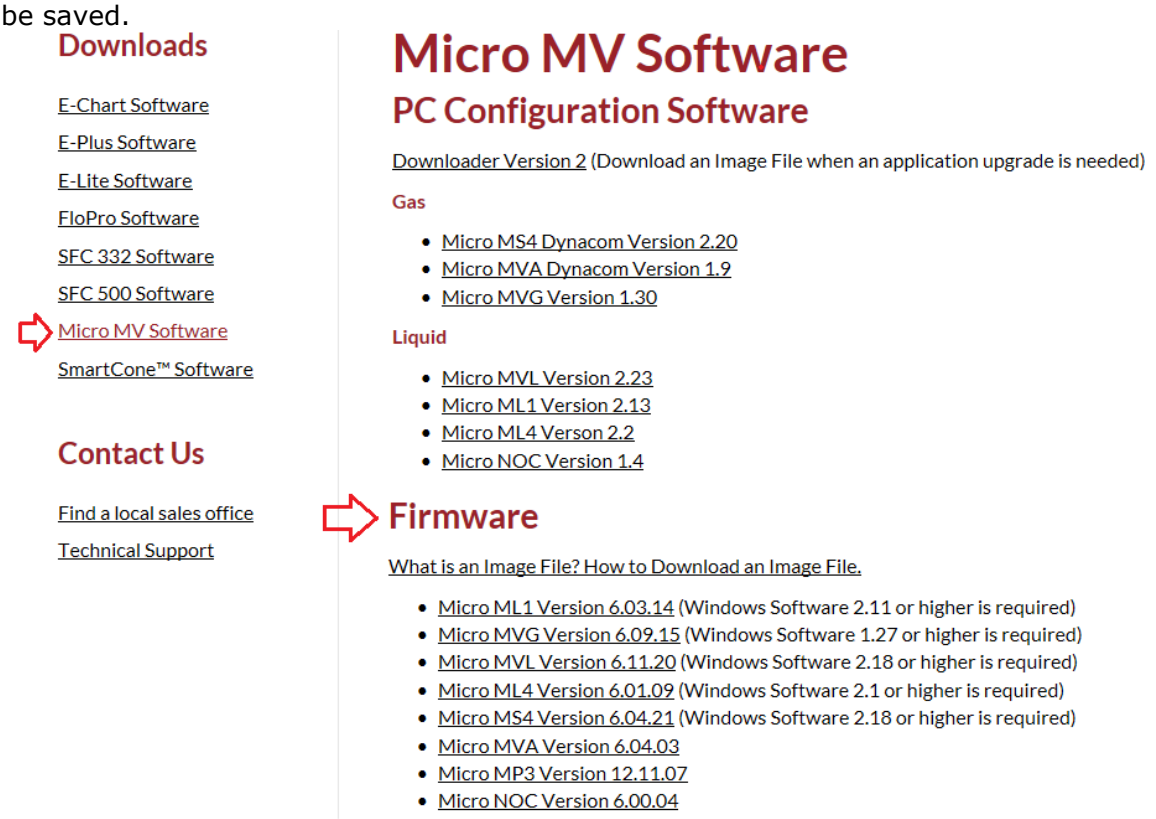

Step 4. The file will start to transfer to your computer. The download time depends on your Internet connection speed and the type of application that being downloaded.

Step 5. After the download is finished, follow the steps in the image downloading setup.

Getting acquainted with the flow computer wiring:

Back Terminal Wiring:

The back terminal wiring indicates the overall positions of the terminal plugs and their functions. Though the back panel's jumpers are also shown, refer to the next drawing, "Back Panel Jumpers", for information on their settings and functions.
The MicroMV receives its power via the .top two pins on Terminal P1, on the left of the board. Also on Terminal P1 from top to bottom are inputs to the four serial connections
To the right (P4), from top to bottom, are two turbine inputs, density frequency input, and switch/status inputs and output.
Terminal P3, at the lower bottom, handles analog inputs/RTD and analog output.

VERSION 2 - MICROMV MAIN/MEMORY BOARDS (MICRO2009 AND LATER MODEL)

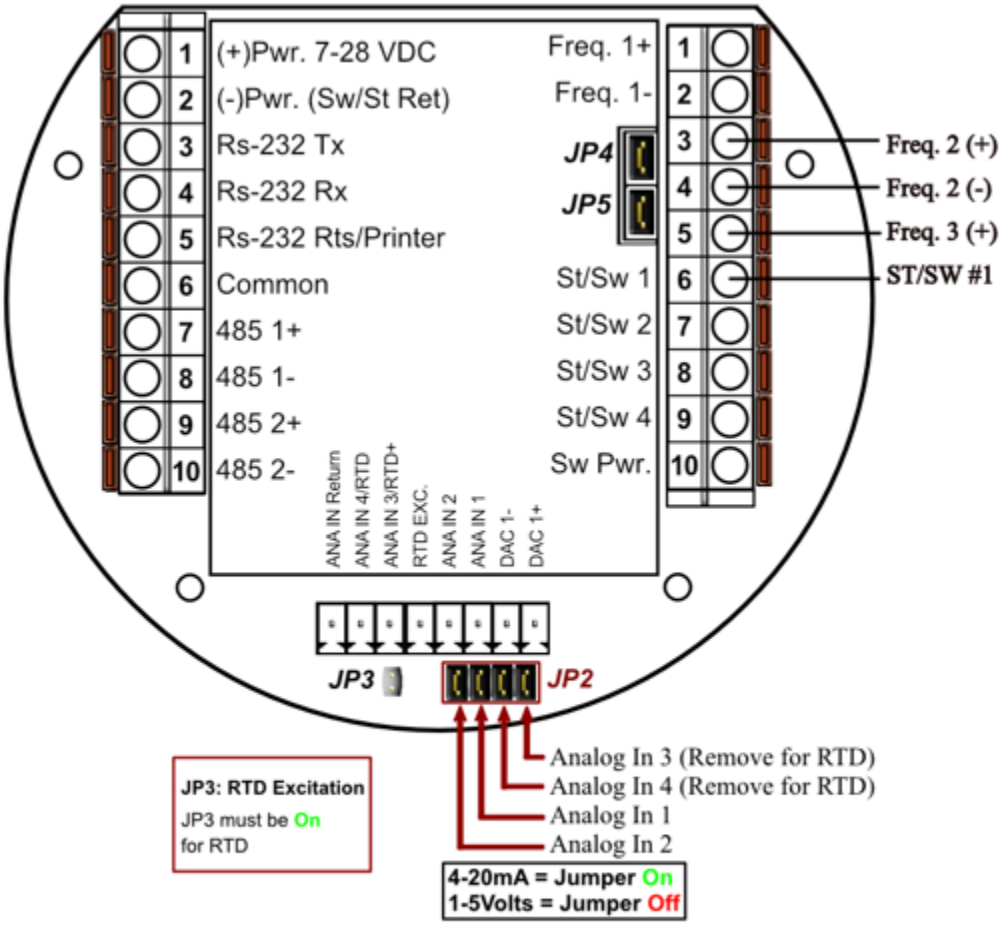

JP4: When ON Meter 1 Uses Square Wave. When OFF Meter 1 Uses Sine Wave
JP5: When ON Meter 2 Uses Square Wave. When OFF Meter 2 Uses Sine Wave

VERSION 1 - MICROMV BOARD (OLDER MICROMV MODELS)

Back Panel

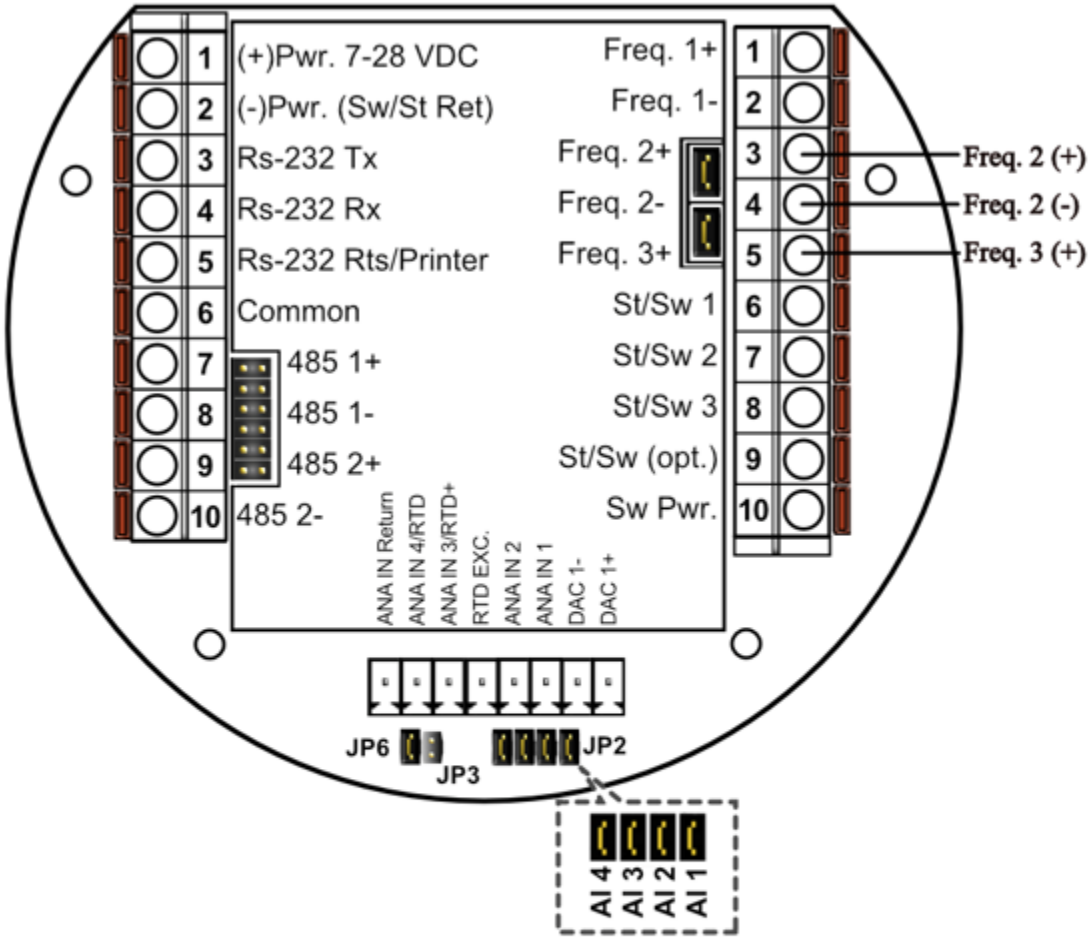

JP2: Must be installed for 4-20mA inputs. When removed, the analog input is used as 1 to 2.5 Volts Input. JP2 consists of 4 links, each link corresponds to one analog input.

JP3: Is RTD Excitation and should never be installed when Analog 3 & 4 are used as Analog inputs (See RTD Connection for details).

JP4: When ON, Meter 1 Uses Square wave.When OFF, Meter 1 Uses Sine wave

JP5: When ON, Meter 2 Uses Square Wave. When OFF, Meter 2 Uses Sine Wave

JP6: Always installed. It can be removed after power is removed to clear RAM memory.

INPUT/OUTPUT: Assigning and Ranging Inputs

Input/Output Assignment

We will now configure your Micro MV Gas Flow Computer's inputs and outputs. The flow computer allows the user to configure the inputs and outputs. The flow computer will not use the unassigned inputs.

How to assign a transmitter to an I/O point through window program:

1 Click "Configure Device", configuration menu is prompted

2 On configuration menu, click "Input Assignment"

3 Enter assignments for DP, temperature, pressure, density and spare inputs.

4 **Assignment (1-*n*)**. Assignments 1-4 are analog inputs attached to terminal of the back panel. These inputs accept 4-20mA or 1-5 volts input are suitable for temperature, pressure, density, or spare inputs. An assignment 5 is strictly RTD (temperature) input only for the meter, densitometer or spare. Assignment 7 indicates a density frequency input; it is assigned automatically once you choose live density frequency input in the setup menu at density type Assignment 10 (module 1) is for Rosemount multi-variable module only. DP, pressure, and temperature for the meter can be assigned. When a frequency type primary element is hooked to the flow computer, the Multi Variable pressure and temperature can be used and the DP becomes a spare input that could be assigned for strainer differential.

Ranging the Transmitter Inputs:

Enter the range values for analog inputs: after assigning the analog inputs, click square box next to the assignment to scale the 4-20mA. Enter the value at **`@4mA`** and **`@20mA`**. Enter both values similar to the way the transmitter is ranged. 1-5 volts are equivalent to 4-20mA. Enter the 1 Volt value at the 4mA, and 5 volt value at 20mA. When the Multi Variable is used the 4-20 ma scale has no effect on anything and does not need to be configured for that input. The reason is simply that the flow computer gets the data via digital communication from the transmitter in engineering units, and therefore a scale is not needed. Normal pressure range is 0-3626, temperature –40 to 1200, DP –250 to 250, or -830 to 830 inches of water.

2. **Enter the high and low limits**: high limits and low limits are simply the alarm points in which you would like the flow computer to flag as an alarm condition. Enter these values with respect to the upper and lower range conditions. Try to avoid creating alarm log when conditions are normal. For example: If the line condition for the pressure is between 0 to 500 PSIG. Then you should program less than zero for low-pressure alarm, and 500 or more for high-pressure alarm. High limits are also used in the SCALE for the Modbus variables. The high limit is equivalent to 32767 or 4095. The low limit is not used for calculating the scale. The scale starts at zero to wherever the high limit value.
3. **Set up the fail code: `Maintenance`** and **`Failure Code`** values tell the flow computer to use a default value in the event the transmitter fails. The default value is stored in **`Maintenance`**. There are three outcomes: the transmitter value is always used, no matter what (**`Failure Code`** = 0); the **`Maintenance`** value is always used, no matter what (**`Failure Code`** = 1); and the **`Maintenance`** value is used only when the transmitter's value indicates that the transmitter has temporarily failed (**`Failure Code`** = 2).

RTD inputs will skip 4-20 mA assignment because RTD is a raw signal of 50Ω (ohms) to 156Ω. Readings beyond that range require a 4-20 mA signal to the flow computer or using the built in Rosemount Multi Variable transmitter. The Rosemount Multivariable has a range of –40-1200 degrees Fahrenheit.
Density coefficients for raw frequency inputs are programmed in this menu. The menu will only show parameters relevant to the live density selected (i.e., Solartron or UGC, etc.).

WIRING:

Wiring to the flow computer is very straightforward and simple. But still it is very important to get familiar with the wiring diagram.

Wiring of Analog Inputs: Version 2 Board

MicroMV Main/Memory Boards (Micro2009 and Later Model)

Typical wiring for analog inputs 2 and 1 are shown in the drawing. Analog inputs 4 and 3 are to the left of analog 2 and 1 separated by the RTD excitation. Note that the analog input has only one common return that is the -Ve signal of power supply powering the transmitters.

When wiring **1-5 volts**, **make sure to calibrate** the flow computer for the 1-5 volt signal because the flow computer calibration defaults for the 4-20 ma, which is different from the 1-5 volts. JP2 must be removed for 1-5 volt inputs. Signal line impedance provided by our flow computer is 250Ω.

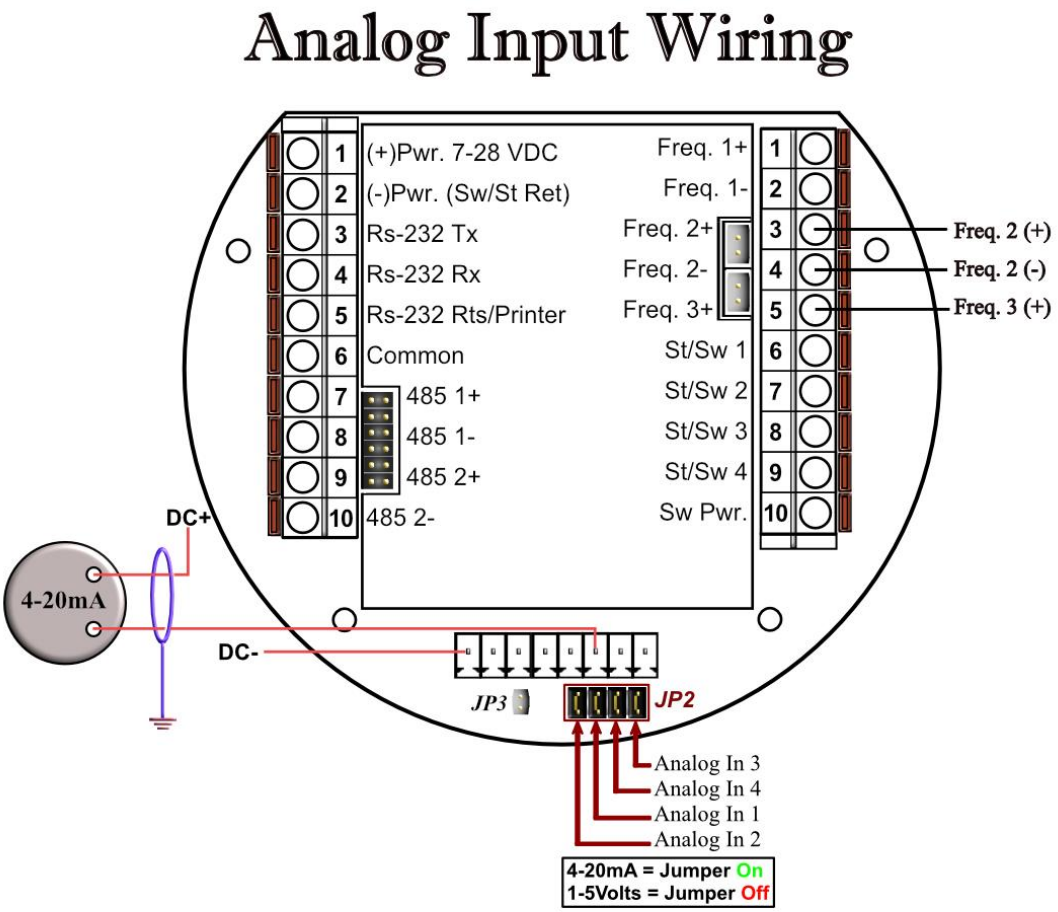

Wiring of Analog Inputs: Version 1 Board

MicroMV Board (Older MicroMV Models)

Typical wiring for analog inputs 1 and 2 are shown in the drawing. Analog inputs 3 and 4 are to the left of analog 1 and 2 separated by the RTD excitation. Note that the analog input has only one common return that is the -Ve signal of power supply powering the transmitters.

When wiring **1-5 volts**, **make sure to calibrate** the flow computer for the 1-5 volt signal because the flow computer calibration defaults for the 4-20 ma, which is different from the 1-5 volts. JP2 must be removed for 1-5 volt inputs. Signal line impedance provided by our flow computer is 250Ω.

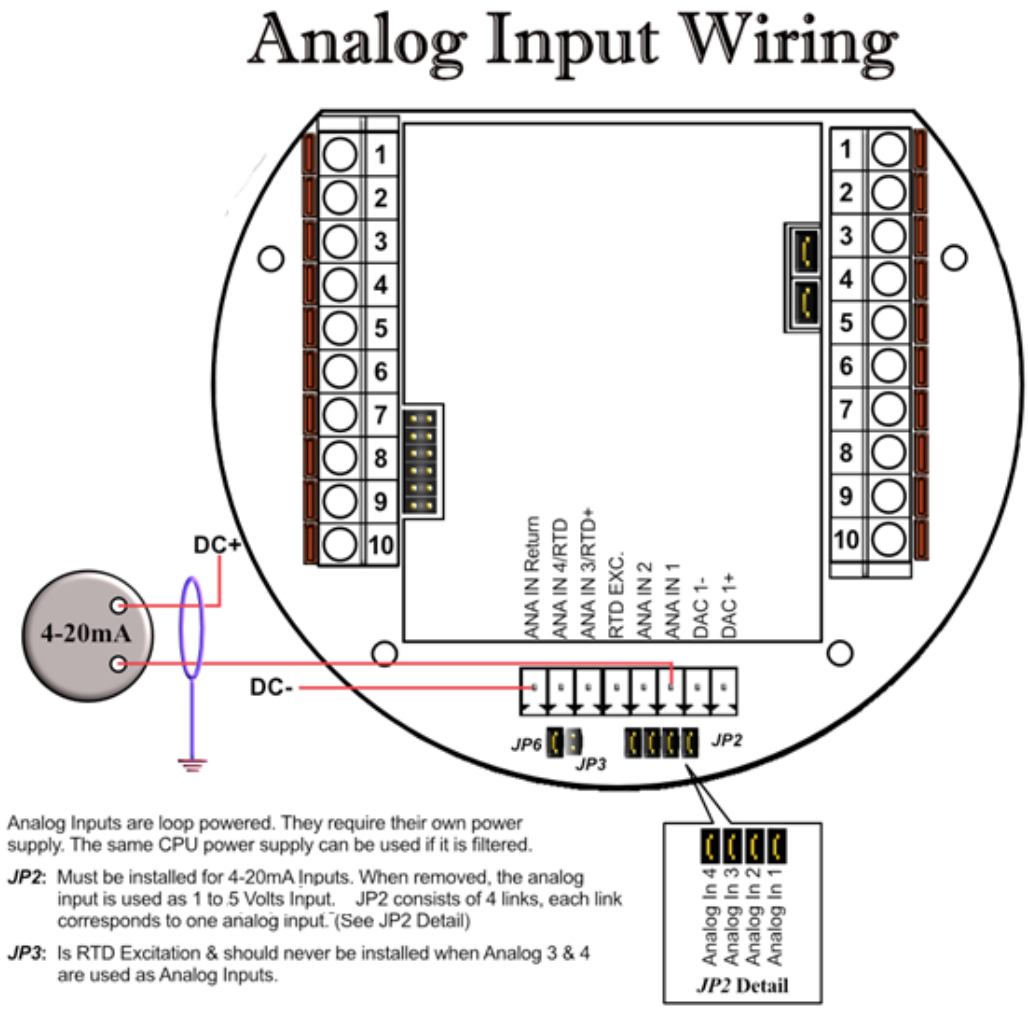

Analog Inputs are loop powered. They require their own power supply. The same CPU power supply can be used if it is filtered.

JP2: Must be installed for 4-20mA Inputs. When removed, the analog input is used as 1 to 5 Volts Input. JP2 consists of 4 links, each link corresponds to one analog input. (See JP2 Detail)

JP3: Is RTD Excitation & should never be installed when Analog 3 & 4 are used as Analog Inputs.

NOTE: The 4-20mA or 1-5 volt DOES NOT source power to the transmitters. You can use the DC power feeding the flow computer to power the 4-20mA loops IF that power supply is FILTERED.

Wiring of RTD

100Ω platinum **must** be used; a temperature range of -43°F to +300°F can be measured. RTD is to the left of analog in 1&2. The RTD excitation jumper (JP3) has to be installed for the RTD to function. In the figure below, notice that the RTD requires three wire connections. Internal excitation current source generated is in the micro AMP range.

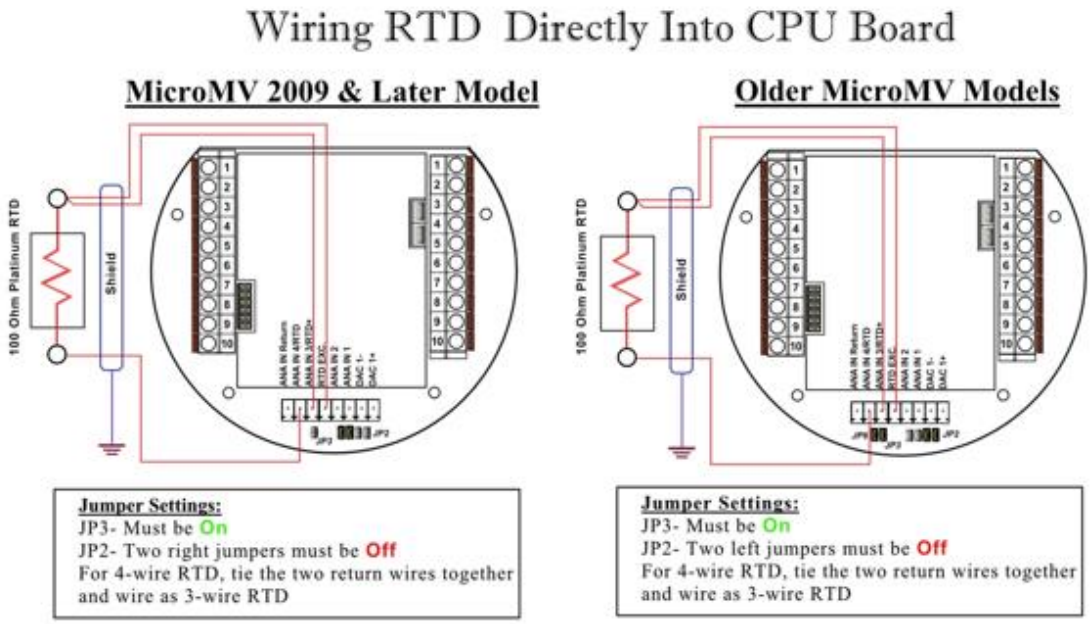

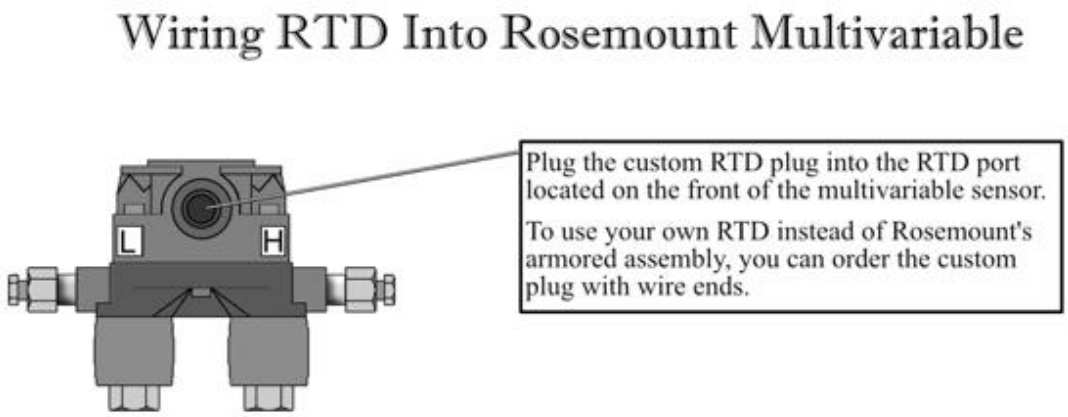

Rosemount RTD Connection

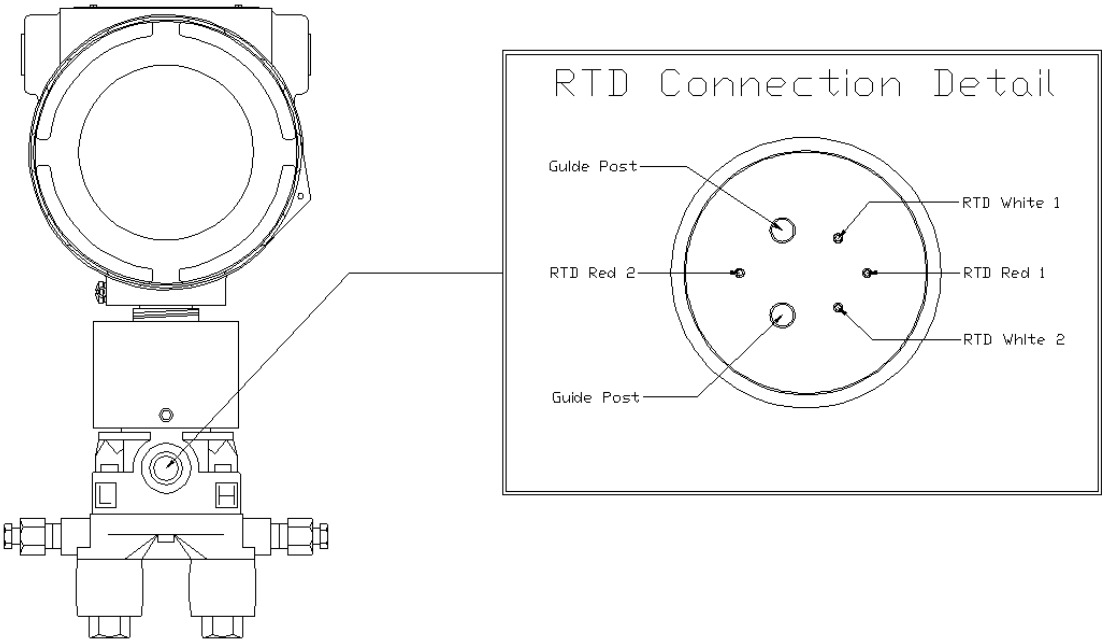

Wiring RTD Into Rosemount Multivariable

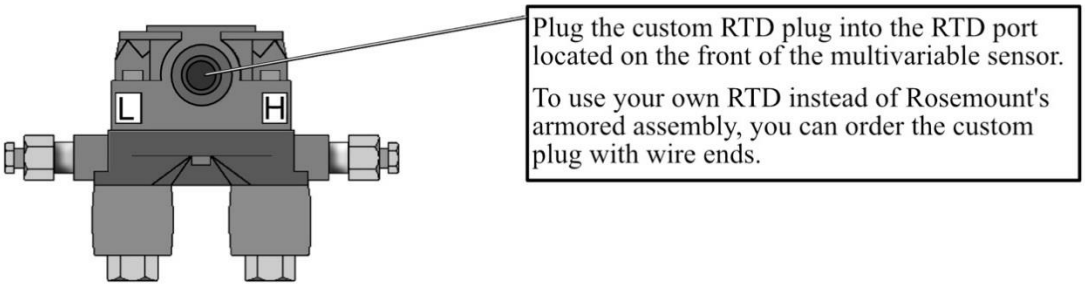

Wiring of Analog Output

Wiring diagram shows typical Analog output wiring. Notice that analog outputs will regulate 4-20 mA current loops but DOES NOT source the power for it. External power is required.

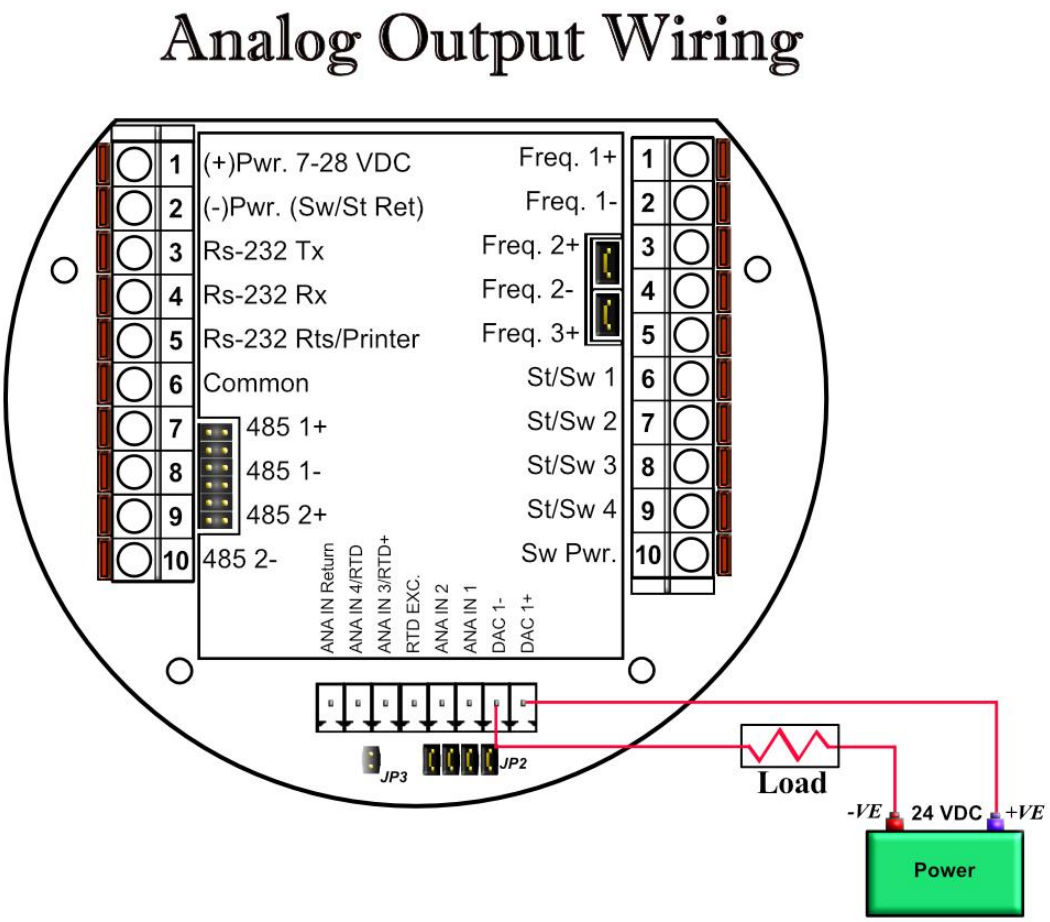

Assigning/Ranging the 4-20mA Analog Outputs:

Go to the **`I/O`** assignment main menu and click **`Analog Output Assignment`**. A selection menu is prompted. Select the analog output number, and then enter what the 4 mA output will indicate and the 20 mA. Make sure that the 20 mA assignment value exceeds the upper range limit of what you assigned the Analog output for, otherwise the analog output will not update beyond 20 mA.

Additional Analog Inputs or Analog Outputs – Board Installation

Connecting Additional Analog Board

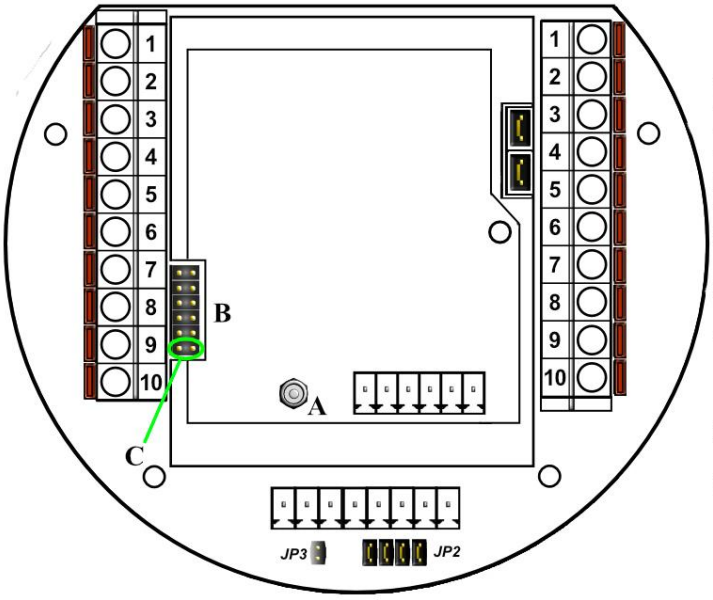

Components Needed:
- Extra Analog Board
- 1/4" Stand-off (**Figure D**)
- 1/4 Nut Screwdriver

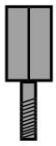

Figure D

Procedure:
1. Remove power from the Main board.
2. Remove nut from the Main Board (See **A**) and Install 1/4" Stand Off in its place.
3. Plug Analog board to the Main Board (Using Connector **B**)
4. Note that the Analog board connector has 10 pins while the Main board connector has 12 pins. The bottom two are NOT connected [See **C**].
5. Place the nut removed on step 2 on the stand-off (**A**) to secure analog board.
6. For wiring of extra Analogs, refer to specific drawing.(Analog Input/Analog Output).

Back Panel - Additional Analog Outputs

Addition analog output board is required to have additional 3 analog outputs.

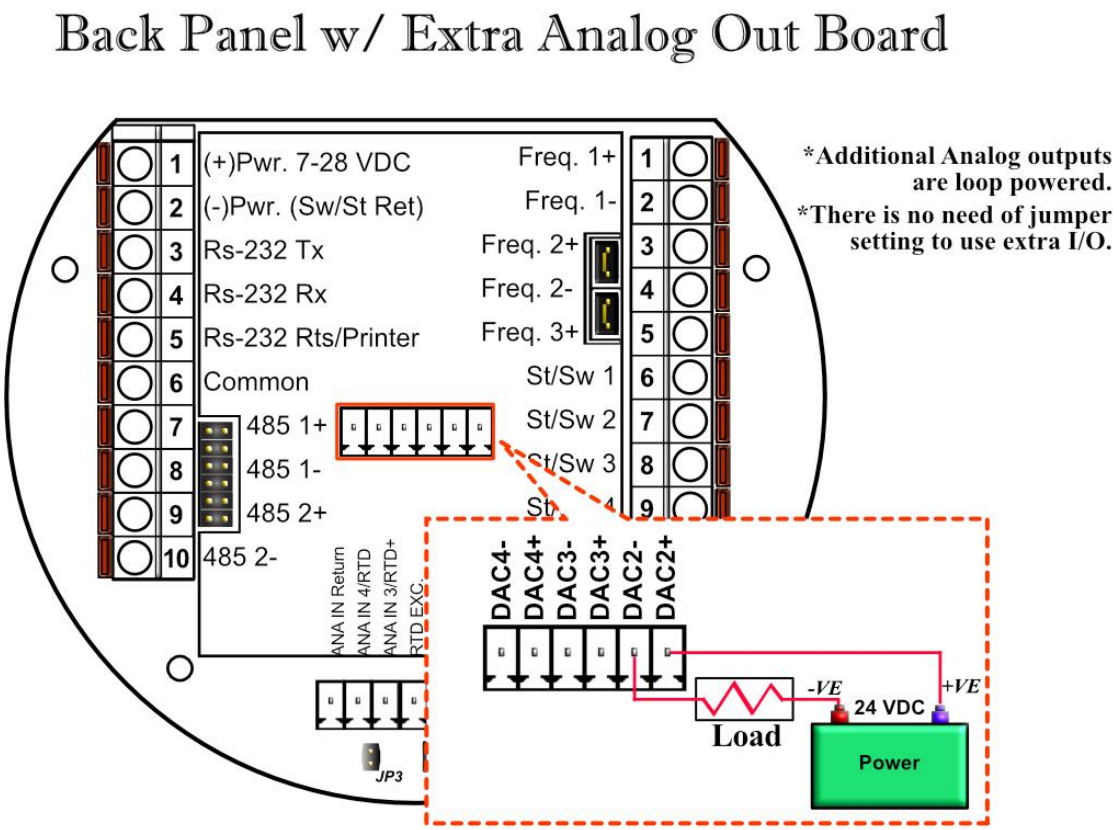

Turbine Input Wiring

Go to view main menu, click turbine under **`Wiring Drawings`**. Two drawings above each other will show typical wiring for turbine meter 1 and turbine meter 2. When connecting sine wave directly from the pickup coil make sure the distance from the pickup coil to the flow computer is very short–less than 50 feet with shielded cable. In the event there is presence of noise, the distance must be shortened. When connecting sine wave signal, the JP4 jumper for meter 1 must not be installed and JP5 jumper for meter 2 must not be installed. (***JP4 and JP5 must be off when using sine wave***). On the other hand, when using square wave, the square wave signal can be sinusoidal but has to be above 5 volts peak to peak with less than 0.4 volts offset in order for the flow computer to read it. **The JP4 jumper for meter 1 must be installed and JP5 jumper for meter 2 must be installed when using square wave.**

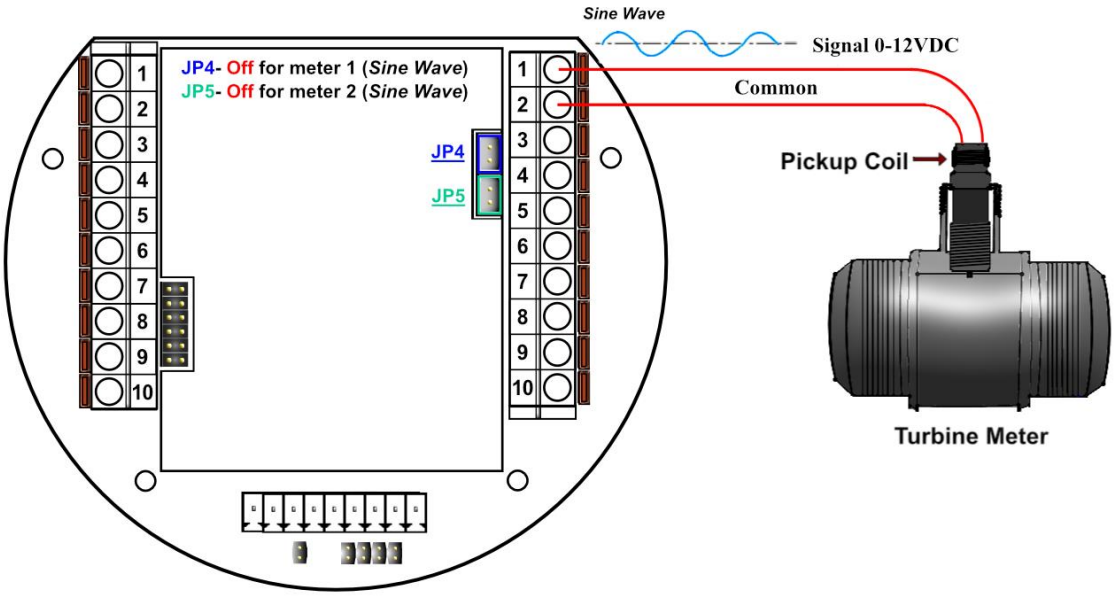

Note:	*When connecting square wave input, the JP4 and JP5 connect the turbine return to the flow computer power return. Therefore, signal polarity is very important. Reverse polarity could result in some* ***damage or power loss****. When sine wave is used the signal polarity is usually of no significance.*

The turbine input is on the top of terminal P3. The third pin down from the top is Turbine/PD input 2 plus and below it is Turbine 2 minus. The third frequency input (fifth pin down) has the positive input and the negative is the power input ground. If a different power supply is used to power the densitometer then the power return for that input needs to be connected to the Micro MV power ground.

Turbine Input Wiring – Using Daniel 1818 Preamp

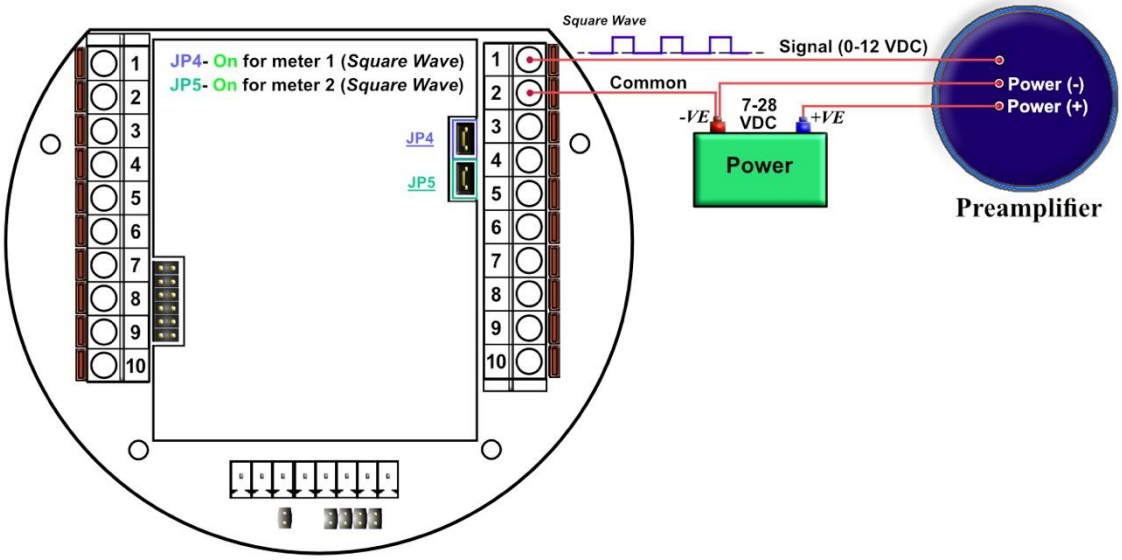

Turbine Input Wiring – Using Daniel 1817 Preamp

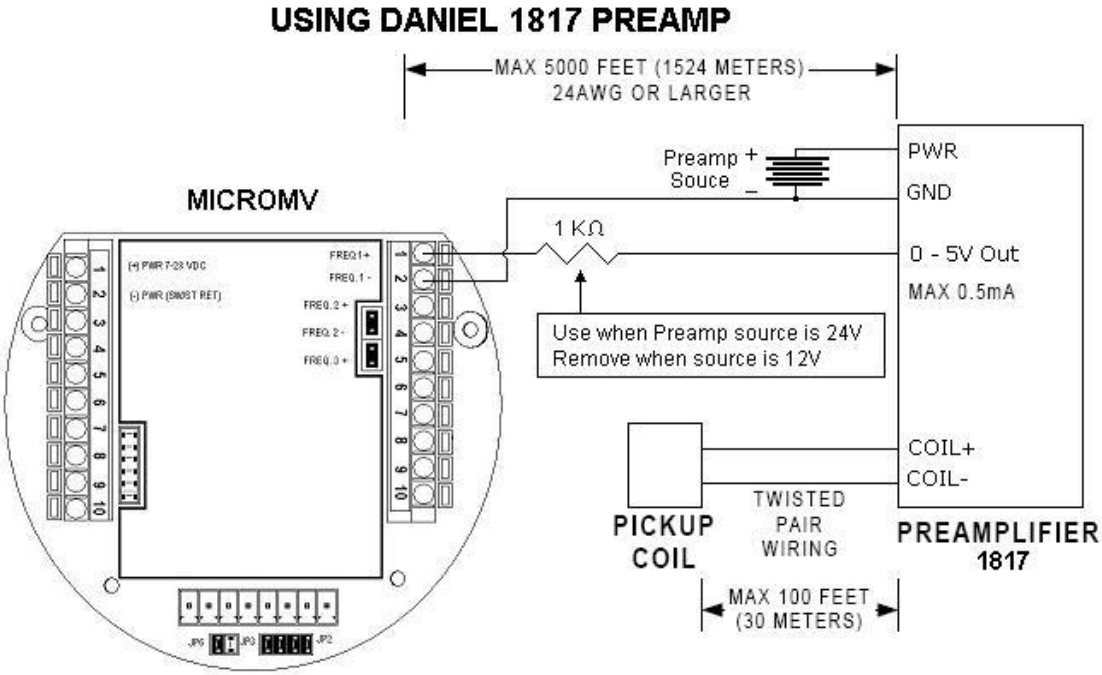

RS-232 Connection

The RS-232 is located on the left terminal block. The third, fourth, fifth, and sixth pins of the RS232 are below the power input. The RS-232 RTS pin can be used for printing reports or shares common pin with the regular RS232 port.

Note: Twisted shielded cable is required.

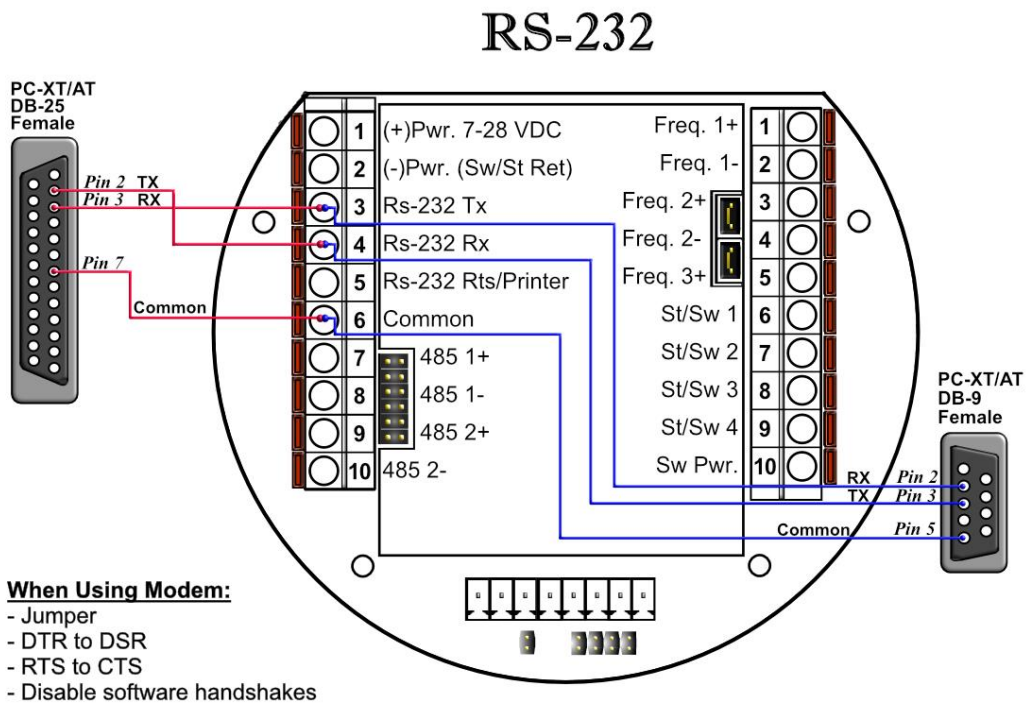

WARNING: *When the RS-232 terminal is used with a modem, external protection on the phone line is required. Jumper DTR to DSR, RTS to CTS, and disable software handshake on the modem RS232 connection*

RS-485 Connection

RS-485 wiring is shown in the wiring diagram under **RS-485**. Two Rs485 channels are available for Modbus communication or as a master to other slave devices. I.e. gas G.C., external Modbus slave devices and token passing ring. The maximum distance when 18-gauge wire is used is 4000 feet.

Note: Twisted shielded cable is required.

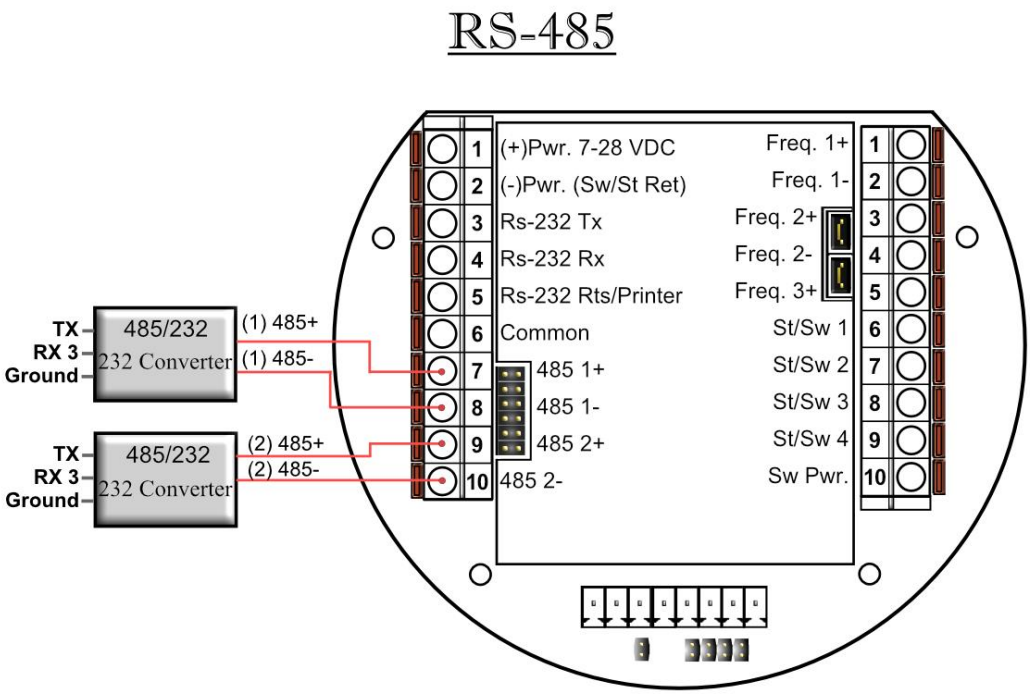

WARNING: When the RS-485 terminal is used, external transient protection and optical isolation is required, especially for long distance wiring.

RS485/232 Adapter

Dynamic recommends B&B Electronics. We generally use Model 485D9TB, which is a port power converter requiring only a 2-Wire connection. The 485D9TB has a terminal block which makes the wiring more convenient and provides the option of external 12V power for low power serial ports. Model 485SD9R can also be used, but it has a DB9 terminal which requires additional cables. With Model 485SD9R the pins that connect to the flow computer are pin 3 on the DB9 to TX on the flow computer and pin 8 on the DB9 goes to RX on the flow computer. For a USB to RS485 converter, we recommend Model USTL4 which is also port powered and supports half and full duplex networks.

***Note**

Version 1: MicroMV Board (Older MicroMV Models)

The second RS485 gets disabled if ST/SW#4 is used. They cannot be used at same time.

To use ST/SW#4 as a serial port, JP7 must be OFF and no assignment for ST/SW#4, otherwise serial port#3(Second 485 Port) gets burned if voltage is applied.

Version 2: Main/Mem MicroMV Boards (Micro2009 and Later Model)

ST/SW#4 and the second RS485 can be used be used at same time.

Wiring of Status Input

There are 4 digital inputs or outputs that are user configurable. The configuration software will configure the input to be a status input or a switch output.. The standard status input has 4 volts of noise hysteresis, with on trigger point of 5 volts and an off point of 1 Volt.

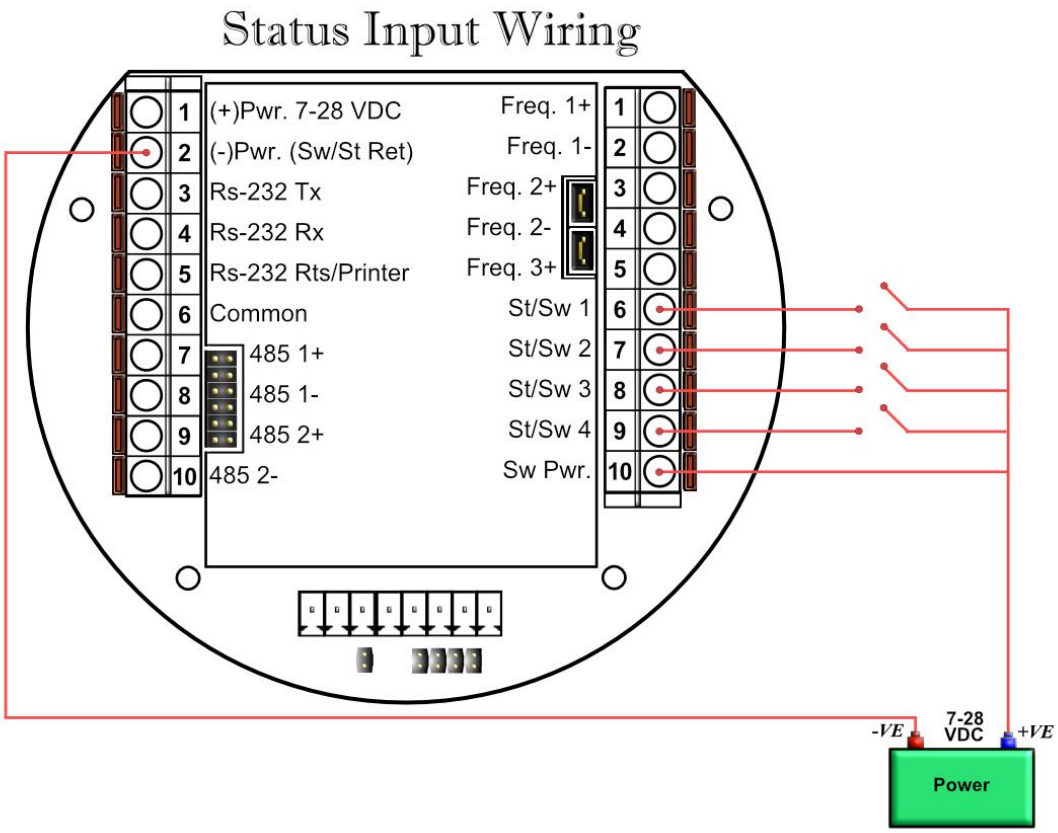

***Note**

Version 1: MicroMV Board (Older MicroMV Models)

The fourth digital I/O is optional and can only be use if the 2nd RS485 is not used.
The second RS485 gets disabled if ST/SW#4 is used. They cannot be used at same time.
To use Status 4 JP7 Must be ON otherwise OFF

Version 2: Main/Mem MicroMV Boards (Micro2009 and Later Model)

ST/SW#4 and the second RS485 can be used be used at same time.

Wiring of Switch/Pulse Outputs

Switch one and two can be on /off or pulse type output up to 125 pulse per second. Notice that the switch outputs are transistor type outputs (open collector type with maximum DC rating of 350 mA continuous at 24 VDC) connections		
1	Status Input /switch output 1	Switch - Maximum rating: 350mA @24 volts Switch Output Range: 5-28 VDC Status Input Rating: 6-28 VDC
2	Status Input/switch output 2	
3	Status Input /switch output 3	
4	Status input/ switch output 4	

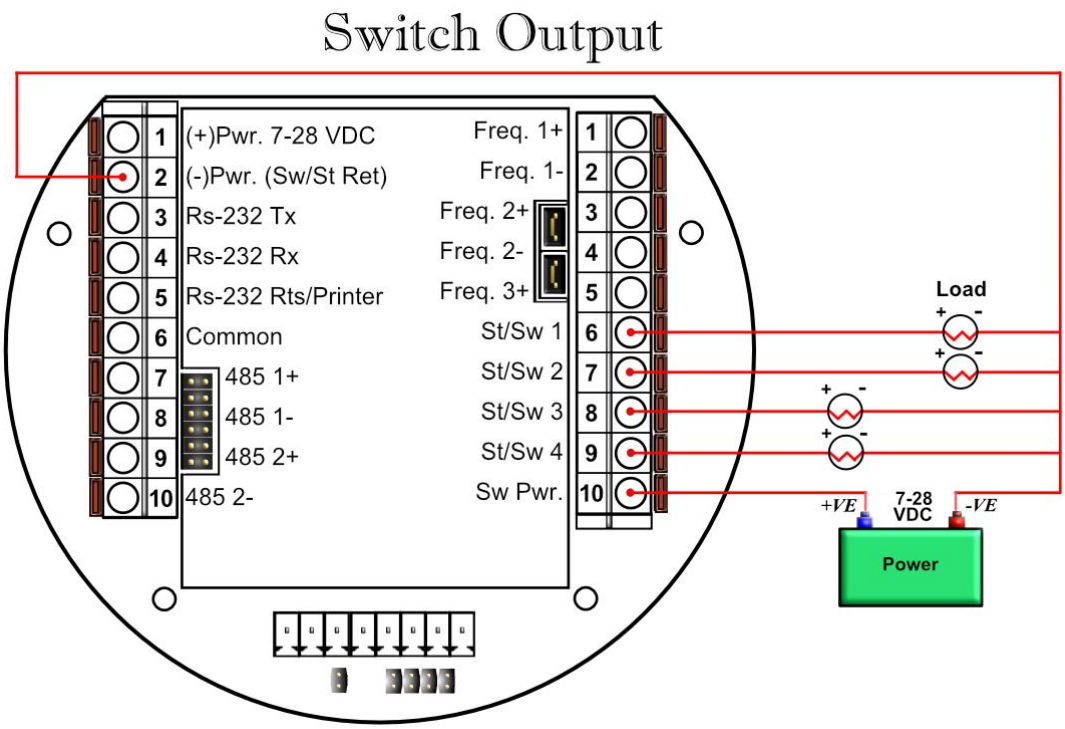

***Note**

Version 1: MicroMV Board (Older MicroMV Models)

The fourth digital I/O is optional and can only be use if the 2nd RS485 is not used.

When using ST/SW#4, the second RS485 gets disabled. They cannot be used at same time.

Version 2: Main/Mem MicroMV Boards

ST/SW#4 and the second RS485 can be used be used at same time.

Switch Output to Relay Wiring Diagram

When wiring the Switch Outputs to an inductive load such as a relay, it is better to add transient protection to the flow computer's electronics due to the surge in voltage that inductive loads may create. This protection can be added as shown in the drawing below.

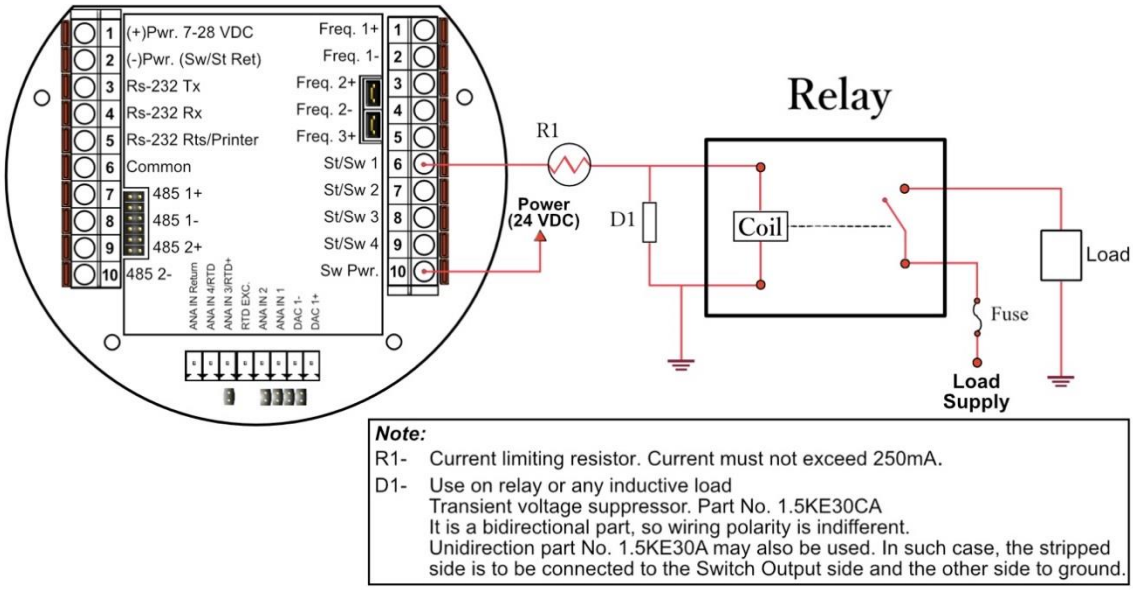

Note:

R1- Current limiting resistor. Current must not exceed 250mA.

D1- Use on relay or any inductive load
Transient voltage suppressor. Part No. 1.5KE30CA
It is a bidirectional part, so wiring polarity is indifferent.
Unidirection part No. 1.5KE30A may also be used. In such case, the stripped side is to be connected to the Switch Output side and the other side to ground.

Density Input Wiring

When using a live densitometer input with frequency signal, the signal can be brought into the MicroMV in its raw form. The MicroMV accepts a sine wave or square with or without DC offset.

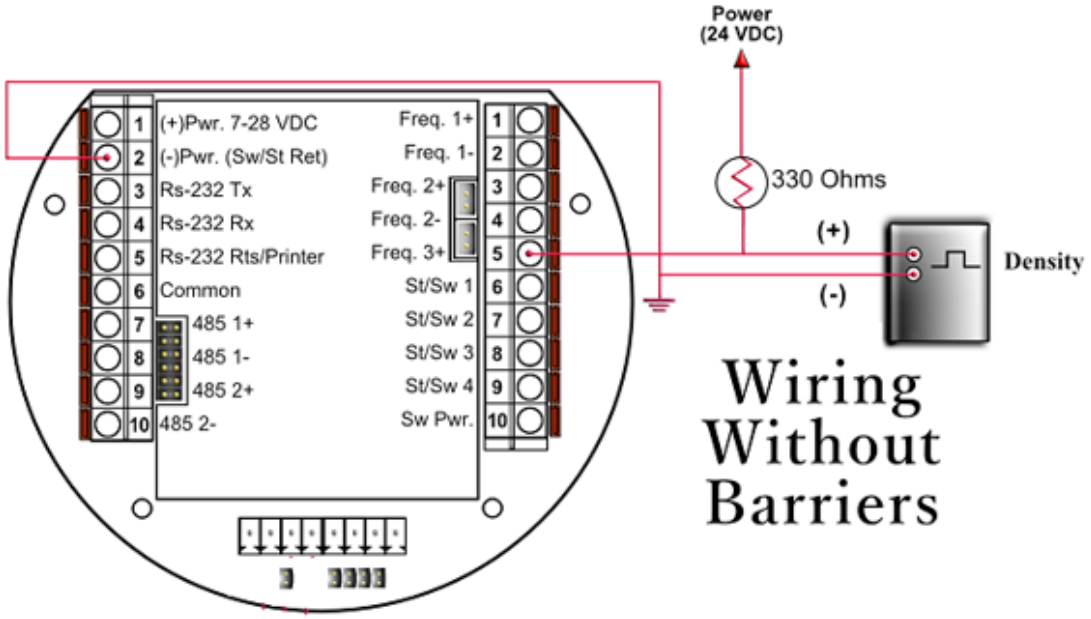

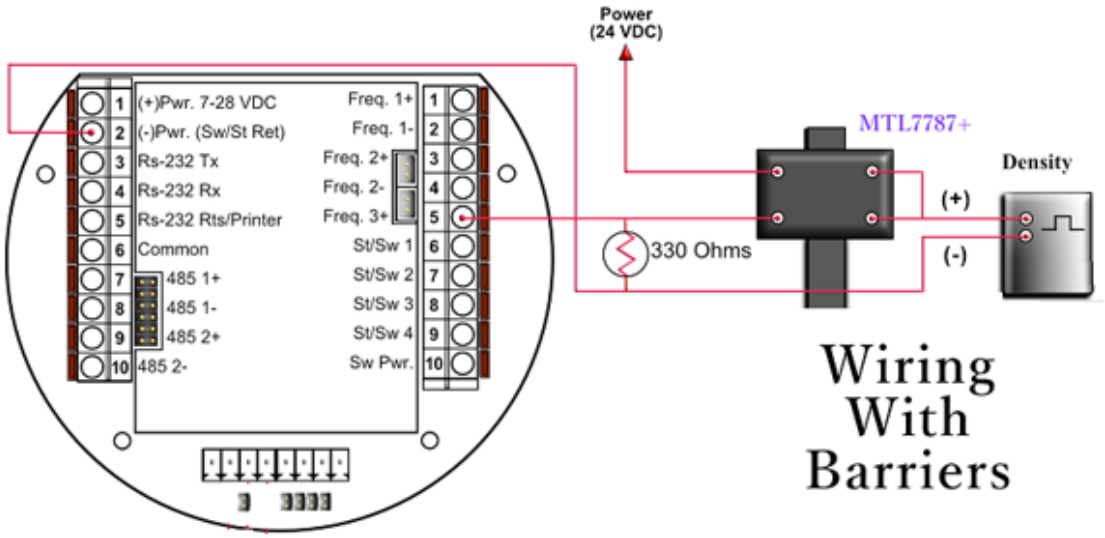

MTL7787+: Barrier for **switches** or **digital inputs**

Note:	*When wiring the density input polarity is of significance and reverse polarity could result in some damage or power loss. When Density input is 4-20mA it should be connected as a regular 4-20mA signal to the analog input and not the density frequency input.*

CALIBRATION

Calibrations are performed under **Calibration**. Select inputs to be calibrated, and then select full, single, offset calibration method.

Analog Input 4-20mA or 1-5 Volt Signal

OFFSET CALIBRATION:

For simple offset type calibration simply induce the signal into the analog input and make sure the MicroMV is reading it. After you verify that the MicroMV recognized the analog input, enter the correct mA reading, and then click OK. The offset type calibration is mainly used when a small offset adjustment needs to be changed in the full-scale reading. The offset will apply to the zero and span. Offset is the recommended method for calibrating the temperature input.

FULL CALIBRATION METHOD:

To perform full calibration be prepared to induce zero and span type signal.

1. Induce the low end signal i.e. 4mA in the analog input.
2. Click inputs to be calibrated under calibration menu, click full calibration, enter the first point - the analog input value i.e. 4mA, and then click OK button.
3. Now be ready to enter the full-scale value. Simply induce the analog signal and then enter the second value i.e. 20mA, and then click OK button
4. ***Induce live values to verify the calibration***.

TO USE DEFAULT CALIBRATION

1. Select Analog Input
2. Select Reset calibration method
3. ***Now verify the live reading against the flow computer reading***

RTD Calibration

RTD Calibration is a 2-step process. The first step is a onetime procedure to verify transducer linearity and is done at the time the meter is being setup. The second step is the routine calibration sequence.

Step 1 – Linearity Verification

1- Use a Decade box with 0-150 °F settings.
2- Connect RTD cable to this resistive element for verification of linearity. Verify low and high points. It must be within ½ degree.
3- Connect the actual RTD element and compare with a certified thermometer.
4- If not within ½ degree do a Full Calibration (See Full Calibration below). If problem persists verify other elements such as RTD Probe, connections, shield, conductivity of connectors, etc.

The purpose of the above procedure is to verify zero and span and make sure that the two points fall within the expected tolerance.

Step 2 – Routine Calibration

Once Linearity has been verified through Step 1, the routine calibration procedure is reduced to simply connecting the actual RTD and doing an offset point calibration (see offset calibration below).

Calibration after that will be simple verification for the stability of the transmitter. If it drifts abnormally then you need to verify the other parts involved.

Calibration Procedures through Windows™ Software

At the top menu, go to Calibration and Select RTD Input.

RESET TO DEFAULT CALIBRATION
1. Select Reset calibration method
2. **Now verify the live reading against the flow computer reading**

OFFSET CALIBRATION:
1. Select offset calibration method.
2. Induce a live value and wait for 10 seconds for the reading to stabilize. Then enter the live value. The value entered must be in Ohm only.
3. **Now verify the live reading against the flow computer reading**

FULL SCALE CALIBRATION:
1. Prepare low range resistive input (i.e., 80 Ohm.) and High range resistive input (i.e., 120. Ohm).
2. Go to the calibration menu and select RTD full calibration method. Induce the low end (80 Ohm.) resistive signal and then wait 10 seconds, enter live value in Ohm, and click OK button.
3. Induce the High range signal (120 Ohm.) and wait 10 seconds, then enter 120 Ohm and click OK button.
4. **Now verify the live reading against the flow computer reading**.

Calibration of Analog Output

Follow the following steps to calibrate the analog output against the end device

1. Go to the calibration menu, select analog output, and then select method. Full calibration will cause the flow computer to output the minimum possible signal 4 mA. Enter the live output value reading in the end device i.e. 4 mA and click OK button. Now the flow computer will output full scale 20 mA. Enter the live output i.e. 20 then click OK button.
2. ***Now verify the output against the calibration device***.

Multi-Variable Transmitters (Model 205)- DP and Pressure

Calibrations are performed under **`Calibration`**. . Select inputs to be calibrated, and then select full, single, offset calibration method.

OFFSET CALIBRATION

1. Induce live value for pressure or DP.
2. Select Multivariable DP or pressure.
3. Select offset calibration method, enter offset, and click OK button.
4. ***Now read induce live values to verify the calibration.***

FULL SCALE CALIBRATION

1. Induce live value for pressure or DP.
2. Select Multivariable DP or pressure
3. Select full calibration method
4. Induce the low range signal, enter the first point, and then click OK button.
5. Induce the high range signal, enter the second point, and then click OK button.
6. ***Now verify the live reading against the flow computer reading***.

TO USE DEFAULT CALIBRATION

1. Select Multivariable DP, temperature, or pressure
2. Select Reset calibration method
3. ***Now verify the live reading against the flow computer reading***

While doing calibration before downloading any of the calibrated values, it is a good practice to verify that the Micro MV close reading to the induced value.
The DP reading must be re-calibrated for the zero offset after applying line pressure.

Verifying Digital Inputs and Outputs

Use the diagnostic menu to verify all inputs and outputs. A live input and output is displayed. On the top of the screen pulse inputs and density frequency input are shown. Compare the live value against the displayed value on the screen. Failure to read turbine input could be a result of a bad preamplifier or the jumper selection for sine and square wave input are not in the correct position. Refer to wiring diagram **Wiring | Turbine** for proper turbine input wiring. Density input can be sine or square wave with or without DC offset. Minimum accepted signal has to be greater than 1.2 volt peak to peak. Status input is shown below the frequency input to the left of the screen. When the status input is on, the live diagnostic data will show **ON**. Minimum voltage to activate the status is 6 volts with negative threshold of 2 volts. To activate the switch outputs to the on and off position, click on "Enable/Disable Diagnostic" button in the diagnostic menu. After the screen freeze, click on "Toggle ON/OFF" button to toggle the switch on/off . To exit, click on "Enable/Disable Diagnostic" button again. The switch outputs are open collector and require external voltage.

CHAPTER 2: Data Entry and Configuration Menus

Introduction to the MicroMVA Software

The Micro MV Gas software is constructed around a menu-driven organization

Configuration File through Window Program

New

Create a new file to store all the programmed information for one Micro MVA Gas Flow Computer. After a file is opened it becomes the currently active file, its contents can be viewed and its parameters can be edited.

Open

Use this function to open an existing configuration file. After a file is opened it becomes the currently active file, its contents can be viewed and its parameters can be edited. When this function is chosen a list of existing configuration files is displayed. Select the file to be opened.

Close

Close or exit configuration file.

Save

When permanent modifications are performed on a file, user must save the new changes before exiting the program, or proceeding to open a different file.

Save As

Use Save As to save the parameters in the currently active file (that is, the parameter values currently being edited) to a new file. The original file will remain in memory.

VIEW

View Drawings

Select the wiring diagram to be displayed. (See details in chapter 1)

- Back Panel
- Analog Input
- RTD
- Analog Output
- Status Input
- Switch Output
- Turbine
- Densitometer
- RS 232
- RS 485

TOOLS

Com Settings

SERIAL COMMUNICATION PARAMETERS

Port - Communication Port Number

Enter the PC port used to communicate with the Micro MV Gas Flow Computer.

Baud Rate

> *Note: this parameter must be set the same for both the PC and the Micro MV Gas Flow Computer for communication to occur.*

Baud rate is defined as number of bits per second. The available selections are 1200, 2400, 4800, 9600, or 19200.

Parity

> *Note: this parameter must be set the same for both the PC and the Micro MV Gas Flow Computer for communication to occur.*

RTU - NONE
ASCII - EVEN or ODD

Set the parity to match the **`Modbus Type`**.

Data Bits

Options available: 5, 6, 7, or 8. Generally used: 8 for RTU mod, 7 for ASCII mode.

Stop Bits

Options available: 1, 1.5,or28. Generally used: 1.

Modbus Type

> *Note: this parameter must be set the same for both the PC and the Micro MV Gas Flow Computer for communication to occur.*

The Modbus Communication Specification is either Binary RTU or ASCII.

Auto Detect Settings

Click this button and the configuration program will attempt to communicate with a single Micro MV Gas Flow Computer at different baud rates and formats.
Failure to communicate can occur because of a wiring problem, wrong PC port selection, communication parameter mismatch between PC and Micro MV Gas Flow Computer (Modbus type, parity, baud rate, etc.) or lack of power to the Micro MV Gas Flow Computer. To use this feature, the user must insure that only one Micro MV Gas Flow Computer is connected to the PC. More than one Micro MV Gas Flow Computer in the loop will cause data collisions and unintelligible responses

USE INTERNET PROTOCOL

Check the box if an Ethernet connection is configured instead of a serial connection. To be able to communicate with the flow computer, both IP Address and Port must be configured.

IP Address

Enter IP Address of the target flow computer.
The standard addressing format is xxx.xxx.xxx.xxx

Port

Enter the port number of Modbus/Ethernet Bridges. The default port number is 502.

Protocol

Select a Modbus TCP or TCP/IP Encapsulation protocol to be used through Ethernet connection.

Modbus TCP –

Also known as Modbus Ethernet consists of a Modbus message without CRC wrapped by a TCP/IP message. This protocol is generally used by industrial Modbus to Ethernet converters.

TCP/IP Encapsulation –

Also known as TCP/IP Pass through Mode consists of a regular Modbus message embedded in a TCP/IP message. This protocol is generally used by a general purpose Ethernet to Serial converters.

UNIT ID NUMBER

The Unit ID Number is used strictly for communication purposes; it can take any value from 1 to 247. Only one master can exist in each loop.

Note:	*Do not duplicate the Unit ID number in a single communication loop! This situation will lead to response collisions and inhibit communications to units with duplicate ID numbers.*

TIME OUT

The amount of time in seconds the program will wait for an answer from the flow computer.

RETRY TIMES

Retry times for the program to communicate with the flow computer in case of timeout.

Meter Configuration

METER SETTING

Company Name

Up to 20 characters. The company name appears in the reports.

Meter Location

Up to 20 characters. This entry appears only in the report and serves no other function.

Day Start Hour (0-23)

Day start hour is used for batch operation. If daily batch is selected, the batch will end at day start hour, all batch totalizers and flow-weighted values are reset.

Disable Alarms

Use Disable Alarms to ignore alarms. When the alarm function is disabled alarms are not logged. Alarms are also not logged if the DP is below the cut-off limit.

Common Parameters

This feature allows the Flow Computer to use the transmitters on meter one to substitute and compensate for meter two.

Run Switching

Run switching is used to switch from tube one to tube two, when flow rate reaches certain limits. The Micro MV Gas Flow Computer has one active output that can be dedicated to this function. The time delay allows for some delay in switching.

Note: if Run Switching is being used, then the meter should be configured for a single stream (see Set Up under Meter).

Run Switch High Set Point

When this flow rate value is exceeded and after the delay timer expires, the switch output will activate. This output normally opens meter run two. The Micro MV Gas Flow Computer provides open collector type output that requires external power.

Run Switch Low Set Point

When the flow rate drops below this value and stays below it until the delay timer expires, the output switch will be turned off to shut meter two.

Meter Bank

Configure for single or dual meters per individual Micro MV Gas Flow Computer. Enter “1” if two meters will be connected to the flow computer.

Single or Dual Streams

Single stream can be single meter or bank of two meters. Dual streams allow the user to monitor independent products on separate streams simultaneously.

Station Total

Station total can add meter one and two, subtract meter one from meter two, or just ignore this feature by selecting none. Station Total does not affect, destroy or otherwise alter the data from either meter. When Station Total is other than none, an additional data parameter, Station Total, is generated by the Micro MV Gas Flow Computer and appears in reports and on the live display monitor.
Station total is not accessible when **`Meter Bank`** = 0.

Flow Rate Selection

The flow rate will be based on daily basis, hourly, or minute.

Flow Rate Averaged Second

The flow rate is averaged for 1-10 seconds to minimize fluctuating flow rate conditions. This number averages the current flow rate by adding it to the previous seconds' flow rate, and then displays an averaged smoothed number. Only a low-resolution pulse meter requires this function.

Disable Alarms

Use Disable Alarms to ignore alarms. When the alarm function is disabled alarms are not logged. Alarms are also not logged if the DP is below the cut-off limit.

Print Intervals in Minutes (0-1440)

When the second port (RS-232) of the Micro MV Gas Flow Computer is configured as printer port, a snapshot report is generated every print interval (i.e., every five minutes, every hour, or every ten hours).

Base Temperature Deg.F

The basis reference temperature for all corrections. Used, for example, when seller contracts to sell to buyer at an agreed base temperature. Typically 60.0 °F in US units, 15 °C in Metric units.

Base Pressure PSIA

The basis reference pressure for all corrections. Used, for example, when seller contracts to sell to buyer at an agreed base pressure. Typical values are 14.73 PSIA for US units, 1.01325 bar in Metric units.

Atmospheric Pressure PSIA

This pressure is the local pressure or contracted atmospheric pressure to be used. Typical value is 14.696 PSIA.

Special Billing Signal

Select low or high signal to start special billing (Digital Input Assignment).

METER DATA

Meter ID

Up to 8 characters. This function will serve as meter tag.

Flow Equation Type (1-6)

1 = API 14.3 (NEW AGA3)
2 = AGA7 (TURBINE or Frequency Type Input)
3 = Venturi
4 = Nozzle
5 = Annubar
6 = Verabar

Select the desired calculation mode. API 14.3 is the latest orifice calculations introduced in 1992. AGA3 is the orifice calculation that was used previously. All new installations are recommended to use API 14.3 for orifice calculations.

Density of Dry Air MLb/MOL

Typical value would be 28.9625.

Relative Density

The real gas relative density is used in the calculations of the compressibility factor, flowing and reference densities (required only when AGA8 is used).

Flow Rate Low/High Limit

The high/low flow rate alarm is activated, when the flow rate exceeds or is below the set limit. The alarm will be documented with time, date, and totalizer.

Density Calculation Type (0-10)

Calc. #	Calculation Type	Comments and Limitations
0 =	NX19	
1 =	AGA8 Gross Method 1	Relative Density: 0.554–0.87 Heating.Value: 477–1150 BTU/SCF
2 =	AGA8 Gross Method 2	Relative Density: 0.554–0.87 Heating.Value 477–1150 BTU/SCF
3 =	AGA8 Detail Method	Relative Density: 0.07–1.52 Heating.Value 0–1800 BTU/SCF
4 =	Steam Equations	$260 \leq T \leq 2500$ Deg.K $0 \leq P \leq 3000$ Mpa
5 =	Ethylene NBS 1045	up to 40 Mpa (5000 PSIG)
6 =	Parahydrogen (NBS 1048)	Gas Form only
7 =	Oxygen (NBS 1048)	Gas Form only
8 =	Nitrogen (NBS 1048)	Gas Form only
9 =	Argon (NBS 1048)	Gas Form only
10 =	Water NBS	

AGA 8 detail method can be used for gases other than natural gas, such as methane, carbon dioxide, ethane, and hydrogen sulfide.

API 14.3 DATA (NEW AGA3)

To set API 14.3 flow parameters, set **`Flow Equation Type = 1`**, and click "eq. settings" button. You will then access a submenu in which you can set the parameters below.

Pipe I.D. Inches

Orifice ID Inches

Pipe ID in inches is the measured inside pipe diameter to 5 decimals at reference conditions. Orifice ID in inches is the measured diameter of the orifice at reference conditions.

DP Cut off

The Micro MV Gas Flow Computer suspends all calculations whenever the DP, in inches of water column, is less than this value. This function is vital for suppressing extraneous data when the DP transmitter drifts around the zero mark under no-flow conditions.

Y Factor (0=None,1=Upstream,2=Downstream)

Y factor is the expansion factor through the orifice. The user must enter the position of the pressure and temperature sensors. Select y=1 if the sensors are installed upstream of the orifice plate. Select y=2 if the sensors are down stream of the orifice plate.

Isentropic Exponent (Specific Heat)

Ratio of specific heat is a constant associated with each product. Even though it varies slightly with temperature and pressure, in most cases it is assumed as a constant.

Viscosity in Centipoise

Viscosity is entered in centipoise even though viscosity will shift with temperature and pressure; the effect on the calculations is negligent. Therefore using a single value is appropriate in most cases.

Reference Temperature of Orifice

Reference temperature of orifice is the temperature at which the orifice bore internal diameter was measured. Commonly 68 °F is used.

Orifice Thermal Expansion Coeff. E-6

Orifice thermal expansion is the linear expansion coefficient of orifice material.

Type 304 and 316 Stainless	9.25 E 6
Monel	7.95 E 6
Carbon Steel	6.20 E 6

Reference Temperature of Pipe

Reference temperature of pipe is the temperature at which the pipe bore internal diameter was measured. Commonly 68 °F is used.

Pipe Thermal Expansion Coeff. E-6

Pipe thermal expansion is the linear expansion coefficient of pipe material.

Type 304 and 316 Stainless	9.25 E 6
Monel	7.95 E 6
Carbon Steel	6.20 E 6

AGA 7 DATA (FREQUENCY)

K Factor

K Factor is the number of pulses per unit volume, i.e. 1000 pulses/CF. The meter's tag would normally indicate the K Factor.

Meter Factor

Meter Factor is a correction to the K Factor for this individual meter, applied multiplication to the K factor.

Flow Cutoff Frequency

The Micro MV Gas Flow Computer will quit totalizing when the turbine frequency (or other frequency input) is below this set limit. This feature is to reduce extraneous noise appearing as volume data when the meter is down for period of time.
This value is entered as pulses per second.

Linear Factor

Enter the different correction factors for the meter at different flow rates. The Micro MV Gas Flow Computer will perform linear interpolation each second. Notice that even though using this feature enhances the measurement accuracy and range, performing audit trail on a linearized meter factor is very difficult.

VENTURI DATA

Pipe I.D. Inches

Pipe ID in inches is the measured inside pipe diameter to 5 decimals at reference conditions.

Orifice ID Inches

Orifice ID in inches is the measured diameter of the Venturi throat.

DP Cutoff

The Micro MV Gas Flow Computer suspends all calculations whenever the DP, in inches of water column, is less than this value. This function is vital for suppressing extraneous data when the DP transmitter drifts around the zero mark under no-flow conditions.

Y Factor (0=None,1=Upstream,2=Downstream)

Y factor is the expansion factor through the Venturi. The user must enter the position of the pressure and temperature sensors. Select y=1 if the sensors are installed upstream of the Venturi. Select y=2 if the sensors are down stream of the Venturi.

Isentropic Exponent (Specific Heat)

Ratio of specific heat is a constant associated with each product. Even though it varies slightly with temperature and pressure, in most cases it is assumed as a constant.
Reference temperature of orifice is the temperature at which the orifice bore internal diameter was measured. Commonly 68 °F is used.

Orifice Thermal Expansion Coeff. E-6

Orifice thermal expansion is the linear expansion coefficient of Venturi throat material.

Type 304 and 316 Stainless	9.25 E 6
Monel	7.95 E 6
Carbon Steel	6.20 E 6

Pipe Thermal Expansion Coeff. E-6

Pipe thermal expansion is the linear expansion coefficient of pipe material.

Type 304 and 316 Stainless	9.25 E 6
Monel	7.95 E 6
Carbon Steel	6.20 E 6

Discharge Coefficient C

This value is the discharge coefficient for Venturi flow equations. The default value is 0.9950.

NOZZLE DATA

To set Nozzle flow parameters, set **Meter**|**Meter Data**|**Flow Equation Type = 4**. You will then access a submenu in which you can set the parameters below.

Pipe I.D. Inches

Orifice ID Inches

Pipe ID in inches is the measured inside pipe diameter to 5 decimals at reference conditions. Orifice ID in inches is the measured diameter of the nozzle outlet throat at reference conditions.

DP Cutoff

The Micro MV Gas Flow Computer suspends all calculations whenever the DP, in inches of water column, is less than this value. This function is vital for suppressing extraneous data when the DP transmitter drifts around the zero mark under no-flow conditions.

Y Factor (0=None,1=Upstream,2=Downstream)

Y factor is the expansion factor through the nozzle. The user must enter the position of the pressure and temperature sensors. Select y=1 if the sensors are installed upstream of the nozzle. Select y=2 if the sensors are down stream of the nozzle.

Isentropic Exponent (Specific Heat)

Ratio of specific heat is a constant associated with each product. Even though it varies slightly with temperature and pressure, in most cases it is assumed as a constant.

Reference Temperature of Orifice

These parameters give temperature at which the bore internal diameter was measured on the Reference temperature of orifice is the temperature at which the nozzle throat internal diameter was measured. Commonly 68 °F is used.

Orifice Thermal Expansion Coeff. E-6

Pipe Thermal Expansion Coeff. E-6

These parameters give the linear expansion coefficients of the orifice and pipe materials respectively.

Type 304 and 316 Stainless	9.25 E 6
Monel	7.95 E 6
Carbon Steel	6.20 E 6

Nozzle Type

0 =	ASME long radius
1 =	ISA
2 =	Venturi Nozzle (ISA inlet)

Viscosity in Centipoise

Even though viscosity will shift with temperature and pressure changes, the effect on the calculations is negligent. Therefore using a single value is appropriate in most cases. Enter viscosity in centipoise.

ANNUBAR DATA

To set Annubar flow parameters, set **Meter | Meter Data | Flow Equation Type = 5**. You will then access a submenu in which you can set the parameters below.

Pipe I.D. Inches

Pipe ID in inches is the measured inside pipe diameter to 5 decimals at reference conditions.

Annubar Blockage Number

$$Blockage = \frac{4 \times d}{\pi \times D}$$

$$\begin{aligned} where\ D &= Pipe\ I.D. \\ d &= Annubar\ Blockage\ Number \\ \pi &= 3.141592654 \end{aligned}$$

DP Cutoff

The Smart Flow Computer suspends all calculations whenever the DP, in inches of water column, is less than this value. This function is vital for suppressing extraneous data when the DP transmitter drifts around the zero mark under no-flow conditions.

Flow Coefficient K

Flow coefficient for pipe dimension and wall thickness.

Isentropic Exponent (Specific Heat)

Ratio of specific heat is a constant associated with each product. Even though it varies slightly with temperature and pressure, in most cases it is assumed as a constant.

Reference Temperature

Reference temperature is the temperature at which the orifice bore internal diameter was measured. Commonly 68 °F is used.

Thermal Expansion Coeff.E-6

Linear coefficient of thermal expansion (6.2E-6 for carbon steel)

Type 304 and 316 Stainless	9.25 E 6
Monel	7.95 E 6
Carbon Steel	6.20 E 6

Reynolds Number Factor (FRA)

Reynolds number factor set at 1.0 for Diamond II Annubar.

Manometer Factor (FM)

Manometer factor set at 1.0 for electronic transmitters.

Gage Location Factor (FL)

Gravity correction factor (for liquid manometers only)

Thermal Expansion Factor (FAA)

Thermal expansion factor of the pipe. **FAA** = 1.0 is fine for the range 31°F ≤ T ≤ 106°F.

VERABAR DATA

To set Verabar flow parameters, set **Meter | Meter Data | Flow Equation Type = 6**. You will then access a submenu in which you can set the parameters below.

Pipe I.D. Inches

Pipe ID in inches is the measured inside pipe diameter to 5 decimals at reference conditions.

Blockage No - PW

$$Beta = TheSensorBlockage = \frac{4 \times PW}{\pi \times D}$$

$$where\ D = Pipe\ I.D.\ in\ Inches$$

$$PW = The\ Sensor's\ Probe\ Width\ in\ Inches$$

$$PW = .336''\ \ for\ a\text{-}05\ sensor$$

$$PW = .614''\ \ for\ a\text{-}10\ Sensor$$

$$PW = 1.043''\ \ for\ a\text{-}15\ Sensor$$

$$\pi = 3.141592654$$

DP Cutoff

The Micro MV Gas Flow Computer suspends all calculations whenever the DP, in inches of water column, is less than this value. This function is vital for suppressing extraneous data when the DP transmitter drifts around the zero mark under no-flow conditions.

Flow Coefficient K

Enter flow coefficient for pipe dimension and wall thickness.

Isentropic Exponent (Specific Heat)

Fluid isentropic exponent at flowing conditions.

Reference Temperature

Reference temperature is the temperature at which the bore internal diameter was measured. Commonly 68 °F is used.

Thermal Expansion Coeff. E-6

Enter linear coefficient of thermal expansion. (typically 6.2e-6 for carbon steel).

PREMIUM VALUE

Select Premium Unit 0=Net,1=Mass

Premium data accumulation as either net units MSCF or mass units MLB as a selection.

Premium Level Operation

All instantaneous flow less than premium 1 will be collected in base register.
All instantaneous flow equal to or greater than premium 1 and less then premium 2 will be collected in premium 1 register.
All instantaneous flow equal to or greater than premium 2 and less then premium 3 will be collected in premium 2 register.
All instantaneous flow equal to or greater than premium 3 and less then premium 4 will be collected in premium 3 register.
All instantaneous flow equal to or greater than premium 4 will be collected in premium 4 register.
Premium 4 will be unique in that it will override all other premiums from its value and higher.
Example:

Flow Rate	**400.0**
Premium Level #1	100.0
Premium Level #2	200.0
Premium Level #3	300.0
Premium Level #4	401.0

Result	
Base	100.0
Premium #1	100.0
Premium #2	100.0
Premium #3	100.0
Premium #4	0.0

Flow Rate	**400.0**
Premium Level #1	100.0
Premium Level #2	200.0
Premium Level #3	300.0
Premium Level #4	99.0

Result	
Base	99.0
Premium #1	0.0
Premium #2	0.0
Premium #3	0.0
Premium #4	301.0

Flow Rate	**400.0**
Premium Level #1	100.0
Premium Level #2	200.0
Premium Level #3	300.0
Premium Level #4	150.0

Result	
Base	100.0
Premium #1	50.0
Premium #2	0.0
Premium #3	0.0
Premium #4	250.0

Flow Rate	**400.0**
Premium Level #1	100.0
Premium Level #2	200.0
Premium Level #3	300.0
Premium Level #4	250.0

Result	
Base	100.0
Premium #1	100.0
Premium #2	50.0
Premium #3	0.0
Premium #4	150.0

Flow Rate	**400.0**
Premium Level #1	100.0
Premium Level #2	200.0
Premium Level #3	300.0
Premium Level #4	350.0

Result	
Base	100.0
Premium #1	100.0
Premium #2	100.0
Premium #3	50.0
Premium #4	50.0

Flow Rate	**400.0**
Premium Level #1	100.0
Premium Level #2	200.0
Premium Level #3	300.0
Premium Level #4	100.0

Result	
Base	100.0
Premium #1	0.0
Premium #2	0.0
Premium #3	0.0
Premium #4	300.0

Flow Rate	**400.0**
Premium Level #1	100.0
Premium Level #2	200.0
Premium Level #3	300.0
Premium Level #4	200.0

Result	
Base	100.0
Premium #1	100.0
Premium #2	0.0
Premium #3	0.0
Premium #4	200.0

Flow Rate	**400.0**
Premium Level #1	100.0
Premium Level #2	2000000.0
Premium Level #3	3000000.0
Premium Level #4	300.0

Result	
Base	100.0
Premium #1	200.0
Premium #2	0.0
Premium #3	0.0
Premium #4	100.0

Flow Rate	**400.0**
Premium Level #1	100.0
Premium Level #2	2000000.0
Premium Level #3	3000000.0
Premium Level #4	99.0

Result	
Base	99.0
Premium #1	0.0
Premium #2	0.0
Premium #3	0.0
Premium #4	301.0

Flow Rate	**400.0**
Premium Level #1	1000000.0
Premium Level #2	2000000.0
Premium Level #3	3000000.0
Premium Level #4	250.0

Result	
Base	250.0
Premium #1	0.0
Premium #2	0.0
Premium #3	0.0
Premium #4	150.0

COMMUNICATION PORTS

Unit ID Number

The Unit ID Number is used strictly for communication purposes; it can take any value from 1 to 247.

> *Note: Do not duplicate the Unit ID number in a single communication loop! This situation will lead to response collisions and inhibit communications to units with duplicate ID numbers.*

Only one master can exist in each loop.

Flow Computer Ports

Port #1/#3 Modbus Type

> *Note: this parameter must be set the same for both the PC and the Micro MV Gas Flow Computer for communication to occur.*

The Modbus Communication Specification is either Binary RTU or ASCII.

Port #1/#3 Parity

> *Note: this parameter must be set the same for both the PC and the Micro MV Gas Flow Computer for communication to occur.*

RTU - NONE
ASCII - EVEN or ODD

Set the parity to match the **`Modbus Type`**.

Port #1/#3 Baud Rate

> *Note: this parameter must be set the same for both the PC and the Micro MV Gas Flow Computer for communication to occur.*

Baud rate is defined as number of bits per second. The available selections are 1200, 2400, 4800, 9600, or 19200.

Port #1/#3 RTS Delay

This function allows modem delay time before transmission. The Micro MV Gas Flow Computer will turn the RTS line high before transmission for the entered time delay period.

Port #2 Baud Rate

Baud rate is defined as number of bits per second. The available selections are 1200, 2400, 4800, 9600, or 19200.

Port #2 Modbus Type

> *Note: this parameter must be set the same for both the PC and the Micro MV Gas Flow Computer for communication to occur.*

The Modbus Communication Specification is either Binary RTU or ASCII.

Port #2 Parity

RTU - NONE
ASCII - EVEN or ODD

Set the parity to match the **`Modbus Type`**.

Select 0=RTS, 1=Printer (N/A)

RTS line has dual function selection: either RTS for driving request to send or transmit to serial printer. To use serial printer interface for printing reports, i.e. batch, daily, and interval Connect the serial printer to RTS and common return, and select 1 for printer. Serial printer function is not available.

Port 2 RTS Delay

This function allows modem delay time before transmission. The Micro MV Gas Flow Computer will turn the RTS line high before transmission for the entered time delay period.

Printer Baud Rate (N/A)

Baud rate is defined as number of bits per second. The available selections are 1200, 2400, 4800, or 9600.

Printer Number of Nulls (N/A)

This function is used because no hand shaking with the printer is available and data can become garbled as the printer's buffer is filled. The Micro MV Gas Flow Computer will send nulls at the end of each line to allow time for the carriage to return. Printers with large buffers do not require additional nulls. If data is still being garbled, try reducing the baud rate to 1200.

INPUT/OUTPUTS (I/O)

INPUT ASSIGNMENT – DP/PRESSURE/TEMPERATURE

The Micro MV Gas Flow Computer provides 4 analog inputs, 4 status input/ switch outputs, one density frequency input, two turbine inputs, one 4 wire RTD inputs, and 2 multi variable inputs.. In order for the Micro MV Gas Flow Computer to read the live input, the input must be properly assigned and properly wired.

0=	Not Used	3=	Analog#3	7 =	Dens.Freq (Not Selectable)
1=	Analog#1	4=	Analog#4	10 =	Multi. Variable Module
2=	Analog#2	5=	RTD		

Spare Assignment

Spare input is used for display and alarm purpose only. It is not used in the calculation process. To read spare input value, use the diagnostic screen.

4mA

Enter the 4mA value for the transducer.
Note that this value cannot be edited if **[Parameter] Assignment** = 0. Therefore to set the parameter **Meter#1 Temperature @4mA** the **Temperature Assignment** parameter cannot equal zero.
Note that any **[Parameter]** can potentially have a **@4mA** setting.

20mA

Enter the 20mA value for the transducer.
Note that this value cannot be edited if **[Parameter] Assignment** = 0. Therefore to set the parameter **Meter#1 Temperature @20mA** the **Temperature Assignment** parameter cannot equal zero.
Note that any **[Parameter]** can potentially have a **@20mA** setting.

Low/Hi Limit

Enter the low and high limits. When live value exceeds high limit or less than low limit, a alarm log will be generated.
Note that this value cannot be edited if **[Parameter] Assignment** = 0. Therefore to set the parameter **Meter#1 Temperature Low Limit** the **Temperature Assignment** parameter cannot equal zero.

Maintenance Value

The value to be used when the transmitter fails, or while calibrating. For calibration, set fail code to 1 while calibrating.
Note that this value cannot be edited if **[Parameter] Assignment** = 0. Therefore to set the parameter **Meter#1 Temperature Maintenance** the **Temperature Assignment** parameter cannot equal zero.
Note that any **[Parameter]** can potentially have a **Maintenance** setting.

Fail Code

Fail Code 0: always use the live value even if the transmitter failed.

Fail Code 1: always use the maintenance value

Fail Code 2: use maintenance value if transmitter failed. i.e. 4-20mA is above 21.75 or below 3.25)

Note that this value cannot be edited if **[Parameter] Assignment** = 0. Therefore to set the parameter **Meter#1 Temperature Maintenance** the **Temperature Assignment** parameter cannot equal zero.
Note that any **[Parameter]** can potentially have a **Maintenance** setting.

Use Stack DP

The Micro MV Gas Flow Computer allows the user to select dual DP transmitters on each meter for better accuracy and a higher range flow. Use in conjunction with the DP Switch High % parameter setting.

DP Switch High %

The Micro MV Gas Flow Computer will begin using the high DP when the low DP reaches the percent limit assigned in this entry. Example: DP low was ranged from 0-25 inches and switch % was set at 95%. When low DP reaches 23.75 in (= 0.95 * 25) the Micro MV Gas Flow Computer will begin using the high DP provided the high DP did not fail. When the high DP cell drops below 23.75, the Flow Computer will start using the Low DP for measurement.

Density Type

If live density is connected to the flow computer, user must enter the density type. Raw density frequency or a 4-20mA input can be selected. This density will be used to calculate mass flow and net flow.

Density Type	Densitometer
Type 0	None
Type 1	4–20 mA
Type 2	UGC
Type 3	Sarasota
Type 4	Solartron

Use Meter Temperature as Density Temperature

`Meter|Set Up|Use Meter Temp as Dens.Temp#1`
`Meter|Set Up|Use Meter#2 Temp as Dens.Temp#2`

To allow the meter temperature to calculate the effect of temperature on the densitometer. Make sure the meter and density temperature are similar to avoid measurement errors.

Density Period Low/High Limits

Density Period is the time period in micro second. The densitometer fails if the density period exceeds the density period low or high limits. If the densitometer fails and density fail code is set to 2, the maintenance value will be used.

TRANSDUCER INPUT/ MULTI-VARIABLE TAGS

Up to 8 alphanumeric ID number. The transmitters are referred to according to the TAG ID. All alarms are labeled according to TAG ID. The multi-variables are referred to according to the TAG ID.

STATUS INPUT/SWITCH OUTPUT ASSIGNMENT

Status Input Assignment

User can select any one of status input and assign it to input point.

	Assignment	Comments
1.	Meter#1 Special Billing	
2	Meter#2 Special Billing	
3	Station Special Billing	
4.	Alarm Acknowledge	Reset the previous occurred alarms output bit

Switch Output Assignment

User can assign an output to each of the Micro MV Gas Flow Computer's output switches from this list. The Micro MV Gas Flow Computer switch outputs are open collector type, requiring external D.C power. Outputs in the top list, "Pulse Output", require a definition of pulse output per unit volume. Therefore a Pulse Output Width must be defined when one of these switch types are chosen. These outputs are available through switch 1 or 2 only.
Outputs in the bottom list, "Contact Type Outputs", are ON/OFF type outputs. They can be assigned to any of the four switch outputs.

Switches 1 and 2 can be pulse or contact type output; switches 3, 4 are contact-type output only.

Assignments - Pulse Outputs

	Meter 1	Meter 2	Station
Gross	101	105	109
Net	102	106	110
Mass	103	107	111
Energy	104	108	112

Assignments - Contact Type Outputs

	Meter 1	Meter2
Temperature Low	126	136
Temperature High	127	137
Pressure Low	128	138
Pressure High	129	139
Density Low	130	140
Density High	131	141
Dens. Temp Low	132	142
Dens. Temp High	133	143
DP Low	134	144
DP High	135	145
Meter Down	120	123
Flow Rate Low	121	124
Flow Rate High	122	125

Meter-Independent Parameters	
Day Ended	119
Dens. Period Low	146
Dens. Period High	147
Meter#1 Dens. Calc. Out of Range	148
Meter#1 Dens. Calc. Out of Range	149
N/A	150
Active Alarms	151
Occurred Alarms	152
N/A	157
Run Switch	158
Remote Control	159

Note: Assignments 113–118 are not used.

Pulse Output and **Pulse Output Width**

Pulse Output is used to activate a sampler or external totalizer. The number selected will be pulses per unit volume or per unit mass. If 0.1 pulse is selected, the one pulse will be given every 10-unit volumes has passed through the meter.
Pulse Output Width is the duration, in milliseconds, of one complete pulse cycle (where each cycle is the pulse plus a wait period, in a 50/50 ratio). For example: If POW = 500 mSec, the Micro MV Gas Flow Computer at most can produce one pulse each second regardless of the pulse per unit volume selected (500 mSec pulse + 500 mSec wait). If POW = 10 mSec the Micro MV Gas Flow Computer can produce up to 50 pulses per second.
The Micro MV Gas Flow Computer's maximum pulse output is 125 pulses/sec. The Pulse Output in combination with the Pulse Output Width should be set so that this number is not exceeded.

ANALOG OUTPUT ASSIGNMENT

TAG ID

Up to 8 alphanumeric ID number. The transmitters are referred to according to the TAG ID. All alarms are labeled according to TAG ID
4-20mA selection must be proportional and within the range of the selected parameter.

Assignments:

	Meter 1	Meter 2	Station
Gross Flow Rate	1	5	9
Net Flow Rate	2	6	10
Mass Flow Rate	3	7	11
Energy Flow Rate	4	8	12

	Mete1	Meter2
DP	13	21
Temperature	14	22
Pressure	15	23
Density	16	24
Density Temp	17	25
Base Density	18	26
DP LOW	19	27
DP HIGH	20	28
Specific Gravity	30	32

Meter-Independent Parameters	
Spare #1	33
Spare #2	34
Remote Control*	35
Meter #1 PID	36
Meter #2 PID	37

Examples:

9 = Station Gross Flow Rate
30 = Meter 1 Specific Gravity
25 = Meter 2 Density Temperature

Note: Assignments 29 and 31 are not used.

**Note : Remote control output can be controlled through the Modbus communication link.*

Note: DP = Differential Pressure

MICRO MV GAS FLOW COMPUTER DISPLAY ASSIGNMENT

Display assignment selects up to 16 assignments. The Micro MV Gas Flow Computer will scroll through them at the assigned delay time.

3 Digits – 1st – Meter Number – 1:Meter#1, 2:Meter#2, 3:Station
2nd, 3rd: Selection

Selection	Description
01	Flow Rate
02	Daily Total
03	Cum. Total
04	Previous Daily Total
05	Premium Daily Total – Base, P1, P2
06	Premium Daily Total – P3, P4
07	Premium Previous Daily Total – Base, P1, P2
08	Premium Previous Daily Total – P3, P4
09	DP/DP Low, High
10	Temperature, Pressure
11	Density, Density at Base
12	Density Frequency, Density Period, Uncorrected. Density
13	Density Temperature, Pressure
14	Flow and Density Calculation Type
15	Spare #1, Spare #2
16	Previous Day AVG Temperature, Pressure, Density
17	Alarms
18	Date, Time
19	Program Variable #1-#4
20	Program Variable #5-#8

Examples:

102= Meter #1 Daily Total
302= Station Daily Total

MODBUS SHIFT

Reassigns Modbus address registers on one Micro MV Gas Flow Computer to variables for easy polling and convenience. Use Modbus Shift to collect values in scattered Modbus registers into a consecutive order. The Micro MV Gas Flow Computer will repeat the assigned variables into the selected locations.
Note: Modbus shift registers are for READ ONLY. Some Modbus registers are 2 byte/16 bit, and some are 4 byte/32 bit. Register size incompatibility could cause rejection to certain address assignments. Refer to the manual for more details and a listing of the Modbus Address Table Registers.
Example: you want to read the current status of switches #1 and #2 (addresses 2617 and 2618) and the Forward and Reverse Daily Gross Total for Meter #1 (Addresses 3173 and 3189). Make assignments such as:

```
3082=2617
3083=2618

3819=3173
3821=3189
```

***Note: Modbus shift registers are READ ONLY registers.**

BOOLEAN STATEMENTS AND FUNCTIONS

Each programmable Boolean statement consists of two Boolean variables optionally preceded a Boolean 'NOT' function (/) and separated by one of the Boolean functions (**&, +, *)**. Each statement is evaluated every 100 milliseconds. Boolean variables have only two states 0 (False, OFF) or 1 (True, ON). Any variable (integer or floating point) can be used in the Boolean statements. The value of Integer or floating point can be either positive (TRUE) or negative (FALSE).

Boolean Functions	**Symbol**
NOT	**/**
AND	**&**
OR	**+**
EXCLUSIVE OR	*****

Boolean points are numbered as follows:

0001 through 0050	Digital I/O Points 1 through 50
0001 –	Status Input/Digital Output #1
0002 –	Status Input/Digital Output #2
0003 –	Status Input/Digital Output #3
0004 –	Status Input/Digital Output #4
0005 – 0050	Spare
0070 through 0099	Programmable Boolean Points (Read/Write) See Boolean Statements.

PROGRAM VARIABLE STATEMENTS

From the MicroMV Flow Computer Configuration Software, Point cursor to **'I/O',** scroll down to **'Program Variable Statements'** and a window will pop up allowing you to enter the statements.

Enter the user programmable statements (**no space allowed**, up to 69 statements). Each statement contains up to three variables and separated by one of the mathematical functions. ***4 digits are required*** for referencing programmable variables or Boolean points. (Example: 0001+7801)

Example:
7832 is equal to total of variable#1(Modbus addr.7801) and variable#2 (Modbus addr.7802)
32=7801+7802

Variable Statements and Mathematical Functions

Each statement can contain up to 3 variables or constants.

Function	Symbol	
ADD	**+**	Add the two variables or constant
SUBTRACT	**-**	Subtract the variable or constant
MULTIPLY	*****	Multiply the two variables or constant
DIVIDE	**/**	Divide the two variables or constants
CONSTANT	**#**	The number following is interpreted as a constant
POWER	**&**	1st variable to the power of 2nd variable
ABSOLUTE	**$**	unsigned value of variable
EQUAL	**=**	Move result to another variable Variable within the range of 7801-7899 (floating points) Variable within the range of 5031-5069 (long integer)
IF STATEMENT	**)**	Compares the variable to another

Example: 7801)T7835 (if variable is greater to or is equal to 1 then go to 7835)
7801)7802=#0 (if variable is greater to or is equal to 1 then set variable 7802 to 0)

GOTO STATEMENT	**T**	Go to a different statement (**forward only**)

Example: 7801%#60**T**7836 (if variable is equal to 60 then go to statement 7836)

COMPARE	**%**	Compare a value (**EQUAL TO**)
GREATER/EQUAL	**>**	Compare a value (**GREATER OR EQUAL TO)**

Example: 7801>7802**T**7836
(If variable 1 is greater to or equal to variable 2 then go to 7836)

Natural Log	**L**	Natural Log of variable

Order of precedence – absolute, power, multiply, divide, add and subtract.
Same precedence – left to right

Scratch Pad Variables – Floating Point - 7801-7830 (Read or Write)
- Long Integer – 5031 – 5069 (Read or Write)

PID PARAMETERS

PID CONFIGURATION

(PID) Proportional Integral Derivative control– We call this function PID, however the flow computer performs Proportional Integral control. And does not apply the Derivative. The Derivative is not normally used in flow and pressure control operations and complicates the tuning operation

Use Flow Loop

(Valid entries are 0 or 1)
Enter 1 if the computer performs flow control.
Enter 0 if the flow computer does not perform flow control.

Flow Loop Maximum Flow rate

Enter the maximum flow rate for this meter. This rate will be basis for maximum flow rate to control at.

Flow Set Point

Enter the set point. The set point is the flow rate that the flow computer will try to control at.

Flow Acting – forward or reverse

Enter 0 if the control is direct acting, Enter 1 if the control is reverse acting.
Direct acting is when the output of the controller causes the flow rate to follow in the same direction. The output goes up and the flow rate increases. A fail Close valve located in line with the meter will typically be direct acting. If the Controller output signal increases, the control valve will open more causing the flow rate to increase.
Reverse acting is when the output of the controller causes the opposite action in the flow rate. A fail open valve in line with the meter will typically be reverse acting. If the Controller output increases the control valve will close some causing the flow rate to decrease.
Care must be taken to study where the valves are located in relation to the meter and whether the valves are fail open or fail close to understand if the controller should be direct or reverse acting. Some control valves can be fail in position (especially electrically actuated control valves). This valve should be studied to understand if the actuators themselves are direct or reverse acting.

Use Pressure Loop

(Valid entries are 0 or 1)
Enter 1 if the computer performs pressure control.
Enter 0 if the flow computer does not perform pressure control.

Pressure Maximum

Enter the Maximum pressure for this meter. This pressure will be basis for Maximum pressure to control at.

Pressure Set Point

Enter the set point. The set point is the pressure that the flow computer will try to control at.

Pressure Acting – forward or reverse

Enter 0 if the control is direct acting, Enter 1 if the control is reverse acting.
Direct acting is when the output of the controller causes the pressure to follow in the same direction. The output goes up and the pressure increases. A fail open valve located in the line downstream of the meter will typically be direct acting to maintain the pressure at the meter. An Increase in the output from the controller will cause the control valve to close thus causing the pressure to increase.
Reverse acting is when the output of the controller causes the opposite action in the flow rate. A fail close valve in the line downstream of the meter will typically be reverse acting to maintain the pressure at the meter. An increase in the output signal will cause the valve to open, which will cause the pressure to be released thus causing the pressure to decrease.
Care must be taken to study where the valves are located in relation to the meter and whether the valves are fail open or fail close to understand if the controller should be direct or reverse acting. Some control valves can be fail in position (especially electrically actuated control valves). These valves should be studied to understand if the actuators themselves are direct or reverse acting.

System Data Minimum Output

Enter the minimum output percent (default to 0)

System Data Maximum Output

Enter the maximum output percent (default to 100.0)

Signal Selection

If flow loop and pressure loops are both configured in the PID control loop, select high or low signal to be the output.

PID flow Base

PID flow rate base can be gross, net, or mass flow rate.

PID TUNING

Flow Controller Gain

(Allowable Entries 0.0 – 9.99)
The gain is effectively 1/Proportional Band.
The basis of theory for proportional band is the relationship of the percentage of the output of the controller to the percentage of the change of the process. In this case, if the control output changes 5% the flow rate should change 5%, the proportional band would be 1.0 and the gain would be 1.0.
If the percentage of the output is 5% and the flow rate would change by 10%, the proportional band would be 2 and the Gain would be 0.5
However since you do not know until you are flowing the effect of the output on the flow rate, you have to start somewhere. A good starting point is to use a proportional band of 0.5 if the valve is properly sized.

Flow Controller Reset

(Allowable Range 0.0 – 9.99)
Reset is the number of minutes per repeat is the time interval controller adjusts the output to the final control element. If the reset is set at 2, the flow computer will adjust the signal to the flow control valve every 2 minutes. If the Reset is set at 0.3, the output signal will be adjusted approximately every 20 seconds, until the process and set point are the same.
The rule of thumb is the reset per minute should be set slightly slower that the amount of time it takes for the control valve and the flow rate to react to the flow computer output signal changing.
This can only be determined when there is actual flow under normal conditions. It is best to start the reset at 0.3 or reset the signal every 3 minutes, if the control valve is properly sized.

Pressure Controller Gain

(Allowable Entries 0.0 – 9.99)
The gain is effectively 1/Proportional Band.
The basis of theory for proportional band is the relationship of the percentage of the output of the controller to the percentage of the change of the process. In this case, if the control output changes 5% the pressure should change 5%, the proportional band would be 1.0 and the gain would be 1.0.
If the percentage change of the output is 5% and the pressure would change by 10%, the proportional band would be 2 and the Gain would be 0.5.
However since you do not know until you are flowing the effect of the output on the pressure, you have to start somewhere. A good starting point is to use a proportional band of 0.5 if the control element is properly sized.

Pressure Controller Reset

(Allowable Range 0.0 – 9.99)
Reset is the number of times per minute the controller adjusts the output to the control valve. If the reset is set at 2, the flow computer will adjust the signal to the final control element every 2 minutes. If the Reset is set at 0.3, the output signal will be adjusted approximately every 20 seconds, until the process and the set point are the same.
The rule of thumb is the reset per minute should be set slightly slower that the amount of time it takes for the control valve and the pressure to react to the flow computer changing the output.
This can only be determined when there is actually flow under normal conditions. It is best to start the reset at 0.3 or reset the signal every 3 minutes, if the control element is properly sized.

Download Firmare/Image File

To Download an Image File to the Flow Computer select the Tools option form the menu, and then Download Program.

A small dialog will appear asking for the file name of the image file. Type it in or use the Browse option to locate it. Once the file name is in place press Download. This task will take about 5 minutes to be completed.

Security

SECURITY CODES

The desktop application provides 4 security areas to prevent users from entering data into certain areas. The four areas are:

Configuration: Allow user to modify device configuration settings.

Override: Allow user to change values directly on the device.

Calibration: Let the user to calibrate the device inputs.

Image File Download: Let user download an image file to the device. This procedure will erase all the information and configuration stored in the device.

Master Access: Once the master access is granted, the user can access to all four areas.

Use the **Tools|Security Codes** option to modify the access code; a form will appear showing the five different security areas and the actual access status (at bottom of the form). To put a new access code log in to the desired security area and press Change security Code, type in the code and retype it on the confirm space to avoid mistyped codes. Then click [OK].

The system will update the security access every time the application connects to the device and every time data is written to the device it will check for security access before writing.

NOTE: In case the access code is forgotten contact our offices for a reset code.

Connect to Device

Click 

to establish the communication. If the communication is failed, check information in the “Communication Port Settings”.

Go Offline

Click 

to disconnect the communication.

Modbus Driver

DFM provides this tool to read and write Modbus registers from and to the MicroMV flow computers. It will display transmitting and receiving message in HEX format. It should be used for testing purpose only.

Settings

Report Templates

Each report has its own default template. The user can edit, modify and save as a new personal report. Specify the new location if you want to use the formatted report.

PID OPERATING

Click PID Loops icon to display PID output percentage, flow, and pressure data. To change setup, select entries under PID menu.

CALIBRATION

Calibrations are performed under **Calibration**. . Select inputs to be calibrated, and then select full, single, offset calibration method. (See details in chapter 1)

PARAMETER OVERRIDE:

Temperature Override

This value is entered when no live temperature is available, or when a different value from the live value should be used.

Pressure Override

Pressure override can be used when no live pressure transmitter is connected to the Micro MV Gas Flow Computer.

Orifice ID Override

Orifice ID in inches is the measured diameter of the orifice at reference conditions.

Base Density Override

Base Density Override is used to override the calculated base density and affects the net calculations only. For products other than natural gas, you must enter base density override for net calculations.
Base density is used to convert mass volume into corrected standard volume

FPV Override

FPV override is used to enter a value to override the NX19 super-compressibility factor.

Heating Value Override

Heating Value Override is used in the AGA8 calculation GROSS METHOD 1. In addition the heating value totalizer requires the heating value; without a BTU override value entered, the Energy Flow rate will always equal zero. Enter this number in BTU/SCF (standard cubic feet).
For AGA8 Detail Method, using zero is a command to use ISO6976-2016 to calculate a heating value.

SYSTEM

DATE AND TIME

Change the date and time for the flow computer.

RESET CUMULATIVE TOTALIZER

Enter reset code to reset accumulated volume.
Non-resettable accumulated volume will roll over at 99999999.

CLEAR SYSTEM

Enter reset system code to reset all data.

HISTORICAL DATA

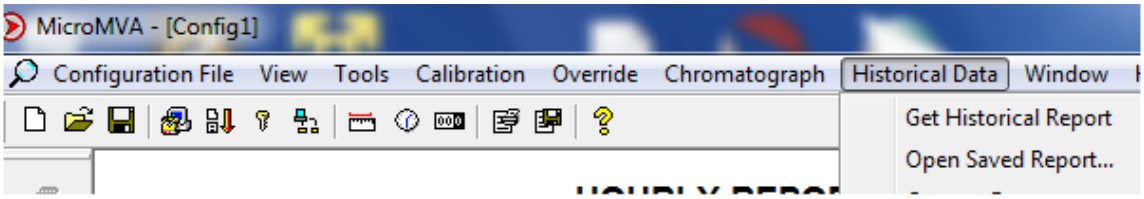

The valid data entries are shown at the bottom of the dialog. The available types of reports are:

PREVIOUS HOURLY DATA

Up to 840 previous hourly data are stored in the Flow Computer. Enter first report and the Flow Computer will go backward from that selected report. Current hour cannot be selected.

PREVIOUS DAILY DATA

Up to 35 previous daily reports can be retrieved.

LAST MONTH DATA

Up to 12 previous month reports can be retrieved. Current month data cannot be retrieved.

ALARM REPORT

Up to 100 previous alarm data can be retrieved. The data are starting from the most recent to the oldest.

AUDIT REPORT

The audit trail report shows configuration parameter that has changed which could influence the calculated numbers. The Flow Computer provides up to 100 event logs. One purpose for audit trail is to back track calculation errors that result from mistakes by the operator of the flow computer operator.

Viewing previously captured reports

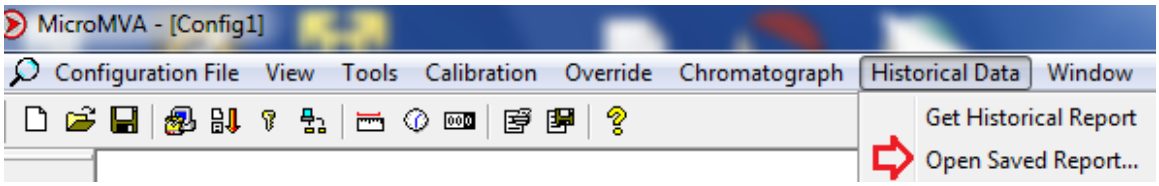

When the option is selected, a dialog will appear asking for the name of the report you want to see. There is a "View last captured report" option than will show the data acquired the last time from a device. If you want to see another report different than the last one just type the name of the report in the space provided.

CHAPTER 3: Data Entry

Through Front Panel Display

The Data entry is a menu driven type construction.

Four Keys **– ESC/Mode, Enter/Select, Down Arrow, Right Arrow**
These keys can be used by using a reflective object. The reflective object must be placed in front of the key to get a response.

Function

ESC/Mode Key
This key serves dual functions. In order to access the data entry, the mode key has to be activated. The mode key is on/off type key. This key will get the security code prompt, and then using select, enter key with the arrow keys to access the program. Place the reflective object on and then off for each step. Once the data menu function access is completed, exit by using the escape key.

Select/Enter Key

It is used to stop screen from scrolling, to select data entry, and accept the data configurations. It is on/off type key. Place the reflective object in front of key, and then move away before the next step.

Down Arrow Key, Right Arrow Key

Scrolling keys, the **Right Key** function is to scroll **right** way for selecting the number to be changed, and then changing the number by using **Down Arrow Key**

MAIN MENU

It consists primarily of series of topics. Your valid choices are the two Arrow Keys and select/enter key. Use Down or Right Arrow keys to make your selection and then use select/enter key. Use Esc/Mode key to go back to previous mode.

Security Code

```
Enter Security Code        00000
```

Enter the right security code to be able to change data.

```
Calibrate/1=M.Var
Override Meter No.
Date Time
Print/Configuration
```

Calibrate /1=M.Var

Enter 0 to calibrate analog input 1-4, RTD, analog output 1-4, or enter '1' to calibrate multi-variable.

```
Enable Calibrate. Mode

Analog Input (1-4)
RTD Input
Analog Output (1-4)
```

Enable Calibrate Mode

Enter '1' to enable calibrate mode. Calibration mode will set the flow computer to continue totalizing at same rate while all values are still showing live readings.

Calibrate Analog Input, RTD

0=**Offset** is a single point calibration that will offset zero and span.
1=**Full** – zero and span must be calibrated.
2=**Reset** to factory calibration.

```
0=Offset,1=Full

2=Reset
```

Offset (Single Point)

Induce the signal into the analog input, wait for 10 seconds for the reading to stabilize, then enter the offset.

```
Enter Offset                8.000


Current Value
            7.9000
```

Full (Zero and Span Calibration)

1. Calibrate Low Point (4mA or 75 Ω,), induce the known live value for the low set point, and wait for 10 seconds for the reading to stabilize. Now enter in that value.

```
First Point          0.000

Current Value
          0.9000
```

2. Calibrate High Point (20mA or 120 Ω), induce the known live value for the high set point, and then wait for 10 seconds for the reading to stabilize. Now enter in that value.

```
Second Point         20.000

Current Value
          19.900
```

Reset (Use Default)

Enter '2' to use manufacture default.

Calibrate Analog Output

0=Offset is a single point calibration that will offset zero and span.
1=Full – zero and span must be calibrated.
2=Reset to factory calibration.

```
0=Offset,1=Full
2=Reset
```

Full (Zero and Span Calibration)

1.The screen will show the minimum possible signal 4mA. Enter the live output value reading in the end device i.e. 4mA.

```
Enter 4mA            4.000

Reading mA   4.000
```

2. Now the flow computer will output full scale 20mA. Enter the live output i.e. 20mA

```
Enter 20mA           20.000

Reading mA  20.000
```

Reset (Use Default)

Enter ‘2’ to use manufacture default.

Calibrate Multivariable

Select DP, Pressure, or Temperature to be calibrated.

```
Calibrate Muli.Var.
DP Inches
Pressure PSIG
Temperature DEG.F
```

Enter the calibrate method (0=Offset, 1=Full, 2=Reset).

```
0=Offset,1=Full
2=Reset
```

Offset (Single Point)

Induce the live value, then enter the offset.

```
Enter Offset          10.0000

Current Value
          10.9000
```

Full (Zero and Span Calibration)

1. Calibrate Low Point - induce the low range signal, and enter in that value.

```
First Point           0.0000

Current Value
          0.9000
```

2. Calibrate High Point - induce the high range signal, and enter in that value.

```
Second Point          250.0000

Current Value
          250.0000
```

Reset (Use Default)

Enter ‘2’ to use manufacture default.

Override Meter No.

Enter the meter number 1 or 2 to change meter override value

TF/PF/MF

HV/FPV/FA/KD2

Dens.b/DCF

Orifice/Pipe/DP

TF/PF/MF

TF - Temperature Deg.F

This value is entered when no live temperature is available, or when a different value from the live value should be used.

PF – Pressure PSIG

This value is entered when no live temperature is available, or when a different value from the live value should be used.

MF – Meter Factor

Enter the value to change current meter factor (AGA7 Method)

HV/FPV/FA

Heating Value Override is used in the AGA8 calculation GROSS METHOD 1. In addition the heating value totalizer requires the heating value; without a BTU override value entered, the Energy Flow rate will always equal zero. Enter this number in BTU/SCF (standard cubic feet).

For AGA8 Detail Method, using zero is a command to use ISO6976 to calculate a heating value.

FPV override: used to enter a value to override the NX19 super-compressibility factor.

DENS.B/DCF

Base Density Override is used to override the calculated base density and affects the net calculations only. For products other than natural gas, you must enter base density override for net calculations.

DCF- Density Correction Factor

ORIFICE/PIPE/DP

Orifice ID in inches is the measured inside pipe diameter to 5 decimals at reference conditions

Pipe ID in inches is the measured diameter of the orifice at reference conditions.

Date/Time

Change Date
Change Time

CHANGE DATE

Month	09
Day	08
Year	00
Change Date 1=Yes	

Enter Month (1-12), Day (1-31), Year(0-99) and then enter ‘1’ to change date.

CHANGE TIME

Hour	09
Minute	08
Second	00
Change Time 1=Yes	

Enter Hour (0-23), Minute (0-59), Second (0-59) and then enter ‘1’ to change time.

Configuration

Configure Meter No 1

Configure I/O

Pulse Output

Others

Configue Meter

Flow Equation 1-6 1

1=New AGA3, (API 14.3)

2=AGA7,3=Ven,4=Nozz,
5=AnnuB, 6=Verabar…

Flow Equation Type (1-6)

1 = API 14.3 (NEW AGA3, 1992 Orifice Equations)
2 = AGA7 (Frequency Type Input)
3 = Venturi
4 = Nozzle
5 = Annubar
6 = Verabar

New AGA3/Venturi/Nozzle/Verabar

Orifice ID	10.00000
Pipe ID,	5.00000
DP Cut Off	1.0000
Viscosity	.024500

Pipe I.D. Inches

Orifice ID Inches

Pipe ID in inches is the measured inside pipe diameter to 5 decimals at reference conditions. Orifice ID in inches is the measured diameter of the orifice at reference conditions.

DP Cutoff

The Micro MV Gas Flow Computer suspends all calculations whenever the DP, in inches of water column, is less than this value. This function is vital for suppressing extraneous data when the DP transmitter drifts around the zero mark under no-flow conditions.

Viscosity in Centipoise

Even though viscosity will shift with temperature and pressure changes, the effect on the calculations is negligent. Therefore using a single value is appropriate in most cases. Enter viscosity in centipoise.

Annubar

A.Blockage	10.00000
Pipe ID,	5.00000
DP Cut Off	1.0000
Viscosity	.024500

ANNUBAR BLOCKAGE NUMBER

$$Blockage = \frac{4 \times d}{\pi \times D}$$

$$\begin{aligned} where\ D &= Pipe\ I.D. \\ d &= Annubar\ Blockage\ Number \\ \pi &= 3.141592654 \end{aligned}$$

PIPE ID INCHES

Pipe ID in inches is the measured inside pipe diameter to 5 decimals at reference conditions.

DP CUTOFF

The Micro MV Gas Flow Computer suspends all calculations whenever the DP, in inches of water column, is less than this value. This function is vital for suppressing extraneous data when the DP transmitter drifts around the zero mark under no-flow conditions.

VISCOSITY IN CENTIPOISE

Even though viscosity will shift with temperature and pressure changes, the effect on the calculations is negligent. Therefore using a single value is appropriate in most cases. Enter viscosity in centipoise.

AGA 7

K Factor	1000.000
Meter Factor	1.00000
Flow Cut Off	5

K FACTOR

K Factor is the number of pulses per unit volume, i.e. 1000 pulses/CF. The meter's tag would normally indicate the K Factor.

METER FACTOR

Meter Factor is a correction to the K Factor for this individual meter, applied multiplication to the K factor.

FLOW CUTOFF FREQUENCY

The Micro MV Gas Flow Computer will quit totalizing when the turbine frequency (or other frequency input) is below this set limit. This feature is to reduce extraneous noise appearing as volume data when the meter is down for period of time.
This value is entered as pulses per second.

Configure I/O

Analog Output

Meter I/O

Status/Switch
F.C.Display

Analog Output

Ana.Out#1 Assign	1
Ana.Out#2 Assign	0
Ana.Out#3 Assign	0
Ana.Out#4 Assign	0

Assignments:

	Meter 1	Meter 2	Station
Gross Flow Rate	1	5	9
Net Flow Rate	2	6	10
Mass Flow Rate	3	7	11
Energy Flow Rate	4	8	12

	Mete1	Meter2
DP	13	21
Temperature	14	22
Pressure	15	23
Density	16	24
Density Temp	17	25
Base Density	18	26
DP LOW	19	27
DP HIGH	20	28
Specific Gravity	30	32

Meter-Independent Parameters	
Spare #1	33
Spare #2	34
Remote Control*	35
Meter #1 PID	36
Meter #2 PID	37

Examples:

9 = Station Gross Flow Rate
30 = Meter 1 Specific Gravity
25 = Meter 2 Density Temperature

Meter I/O

Temperature Deg.F

Pressure PSIG

DP Inches

Densitometer

ASSIGNMENTS

0=	Not Used
1=	Analog#1
2=	Analog#2
3=	Analog#3

4=	Analog#4
5=	RTD

7 =	Dens.Freq (Not Selectable)
10 =	Multi. Variable Module #1
11 =	Multi. Variable Module #2

4MA

Enter the 4mA value for the transducer.

20MA

Enter the 20mA value for the transducer.

Status Input /Switch Output Assignment

Status/Switch#1	000
Status/Switch#2	001
Status/Switch#3	000
Status/Switch#4	000

STATUS INPUT ASSIGNMENT

	Assignment	Comments
1.	N/A	
2-3.	N/A	
4.	Alarm Acknowledge	Reset the previous occurred alarms output bit

SWITCH OUTPUT ASSIGNMENT

User can assign an output to each of the Micro MV Gas Flow Computer's output switches from this list. The Micro MV Gas Flow Computer switch outputs are sourcing through switch power input power. Outputs in the top list, "Pulse Outputs", require a definition of pulse output per unit volume. Therefore a Pulse Output Width must be defined when one of these switch types are chosen. These outputs are available through switch 1 or 2 only.
Outputs in the bottom list, "Contact Type Outputs", are ON/OFF type outputs. They can be assigned to any of the four switch outputs.
Switches 1 and 2 can be pulse or contact type output; switches 3, 4 are contact-type output only.

Assignments - Pulse Outputs

	Meter 1	Meter 2	Station
Gross	101	105	109
Net	102	106	110
Mass	103	107	111
Energy	104	108	112

Assignments - Contact Type Outputs

	Meter 1	Meter2
Temperature Low	126	136
Temperature High	127	137
Pressure Low	128	138
Pressure High	129	139
Density Low	130	140
Density High	131	141
Dens. Temp Low	132	142
Dens. Temp High	133	143
DP Low	134	144
DP High	135	145
Meter Down	120	123
Flow Rate Low	121	124
Flow Rate High	122	125

Meter-Independent Parameters	
Day Ended	119
Dens. Period Low	146
Dens. Period High	147
Meter#1 Dens. Calc. Out of Range	148
Meter#1 Dens. Calc. Out of Range	149
N/A	150
Active Alarms	151
Occurred Alarms	152
N/A	157
Run Switch	158
Remote Control	159

Flow Computer Display Assignment

FC.Display#1	000
FC.Display#2	001
FC.Display#3	000
FC.Display#4	000

Display assignment selection up to 16 assignments. The Micro MV Gas Flow Computer will scroll through them at the assigned delay time.

Assignment

3 Digits – 1st – Meter Number – 1:Meter#1, 2:Meter#2, 3:Station
2nd, 3rd: Selection

Selection	Description
01	Flow Rate
02	Daily Total
03	Cum. Total
04	Previous Daily Total
05	Premium Daily Total – Base, P1, P2
06	Premium Daily Total – P3, P4
07	Premium Previous Daily Total – Base, P1, P2
08	Premium Previous Daily Total – P3, P4
09	DP/DP Low, High
10	Temperature, Pressure
11	Density, Density at Base
12	Density Frequency, Density Period, Uncorrected. Density
13	Density Temperature, Pressure
14	Flow and Density Calculation Type
15	Spare #1, Spare #2
16	Previous Day AVG Temperature, Pressure, Density
17	Alarms
18	Date, Time
19	Program Variable #1-#4
20	Program Variable #5-#8

Examples:

102= Meter #1 Daily Total
302= Station Daily Total

Pulse Output

Pulse Output	
#1 P/Unit#1	1.000
#2 P/Unit#2	1.000
Pulse Width	50

Pulse Output and Pulse Output Width

Pulse Output is used to activate a sampler or external totalizer. The number selected will be pulses per unit volume or per unit mass. If 0.1 pulse is selected, the one pulse will be given every 10 unit volumes has passed through the meter.

Pulse Output Width is the duration, in milliseconds, of one complete pulse cycle (where each cycle is the pulse plus a wait period, in a 50/50 ratio). For example: if POW = 500 msec, the Micro MV Gas Flow Computer at most can produce one pulse each second regardless of the pulse per unit volume selected (500 msec pulse + 500 msec wait). If POW = 10 msec the Micro MV Gas Flow Computer can produce up to 50 pulses per second.

The Micro MV Gas Flow Computer's maximum pulse output is 125 pulses/sec. The Pulse Output in combination with the Pulse Output Width should be set appropriately.

Others

Day Start Hour	7
Print Interval	1440
0=Hour,1=Day,2=Min	0
Disable Alarms	0

Day Start Hour (0-23)

Day start hour is used for daily totalizer reset operation.

Print Intervals in Minutes (0-1440)

When the second port (RS-232) of the Micro MV Gas Flow Computer is configured as printer port, a snapshot report is generated every print interval (i.e., every five minutes, every hour, or every ten hours).

Flow Rate Selection

The flow rate will be based on hourly basis, daily, or minute.

Disable Alarms

Use Disable Alarms to ignore alarms. When the alarm function is disabled alarms are not logged. Alarms are also not logged if the DP is below the cut-off limit.

CHAPTER 4: FLOW EQUATIONS

API 14.3

For more information, please see *Orifice Metering of Natural Gas*, 3rd edition.

Mass Flow Rate $= \frac{\pi}{4} \times N_c \times C_d \times E_v \times d^2 \times \mathrm{Y} \times \sqrt{2DP \times Density} \times .001$

Net Flow Rate $= \frac{Mass\ Flow}{Base\ Density}$

Gross Flow Rate $= \frac{Mass\ Flow}{Flowing\ Density}$

Energy Flow Rate = Net Flow Rate × Heating Value × .001

Where:
N_c = *Units Conversion Constant*
C_d = *Orifice Plate Coefficient of Discharge*
$E_v = \frac{1}{\sqrt{1-\beta^4}}$ = *Velocity of Approach Factor*
d = *Orifice plate bore diameter*
Y = *Expansion Factor*
DP = *Orifice Differential Pressure*

	US unit
N_c	323.279
Density	lb/ft^3
Gross Flow Rate/HR	MCF
Net Flow Rate/HR	MSCF
Mass Flow Rate/HR	MLB
Energy Flow Rate/HR	MMBTU

AGA 7

Please see ***Common Terms*** at the beginning of this chapter.

$$\textbf{Gross Flowrate} = \frac{v_{signal} \times F_M \times F_L \times 3.6}{F_K} = \boldsymbol{q_{gross}}\,\textbf{(MCF/Hr)}$$

$$\textbf{Net Flowrate} = \frac{q_{gross}\rho_{flowing}}{\rho_{reference}} = \textbf{MCF/Hr}$$

$$\textbf{Mass Flowrate} = q_{gross}\rho_{flowing} = \textbf{MCF/Hr}$$

$$v_{signal} = Frequency\ of\ the\ signal\ input,\ pulses/sec$$

$$F_M = Meter\ Factor$$

$$F_L = Linear\ Factor$$

$$F_K = Nominal\ K\ Factor$$

Venturi

Please see ***Common Terms*** at the beginning of this chapter. For further information please see *Measurement Engineering Handbook.*

$$\textbf{Mass Flowrate} = 0.3590722\sqrt{\rho_{flowing} \times DP} \times \frac{C \times F_a \times d^2 Y}{\sqrt{1-\beta^4}}$$

$$= \boldsymbol{q_{mass}} \textbf{ (MLB/HR)}$$

$$\textbf{Net Flowrate (MCF/HR)} = \frac{q_{mass}}{\rho_{reference}}$$

$$\textbf{Gross Flowrate (MCF/HR)} = \frac{q_{mass}}{\rho_{flowing}}$$

$$Where:$$

$$C = Discharge\ coefficien\ t\ C\ (manual\ entry)$$

Nozzle

Please see ***Common Terms*** at the beginning of this chapter. For further information please see *Measurement Engineering Handbook.*

$$\textbf{Mass Flowrate} = 0.3590722\sqrt{\rho_{flowing} \times DP} \times \frac{C \times F_a \times d^2 Y}{\sqrt{1-\beta^4}}$$

$$= \boldsymbol{q_{mass}}\ \textbf{(MLB/HR)}$$

$$\textbf{Net Flowrate} = \frac{q_{mass}}{\rho_{reference}} = \textbf{MCF/HR}$$

$$\textbf{Gross Flowrate} = \frac{q_{mass}}{\rho_{flowing}} = \textbf{MCF/HR}$$

$$Where:$$

$$C = Discharge\ Coefficient\ C\ of\ the\ Nozzle$$

$$= C_\infty + \frac{b}{Rd^n}\ (see\ table\ below)$$

$$Rd = Reynolds\ Number = \frac{22737.47 q_{pps}}{\mu D}$$

$$q_{pps} = Mass\ Flowrate, expressed\ in\ Lb/sec$$

Nozzle type	C_∞	b	n
ASME long radius	0.9975	$-6.53\beta^{0.5}$	0.5
ISA	$0.9900 - 0.2262\beta^{4.1}$	$1708 - 8936\beta + 19779\beta^{4.7}$	1.15
Venturi Nozzle (ISA inlet)	$0.9858 - 0.196\beta^{4.5}$	0.0	0.0

Annubar

Please see ***Common Terms*** at the beginning of this chapter.

$$\textbf{Mass Flowrate} = 359.07264K(D_{flowing})^2 \times F_{RA}F_M F_{AA}F_L \times Y\sqrt{\rho_{pps}DP}$$

$$= q_{mass}\ \textbf{(MLb/Hr)}$$

$$\textbf{Net Flowrate} = \frac{q_{mass}}{\rho_{reference}} = \textbf{MCF/Hr}$$

$$\textbf{Gross Flowrate} = \frac{q_{mass}}{\rho_{flowing}} = \textbf{MCF/Hr}$$

$$\begin{aligned}
Where: \\
K &= Flow\ Coefficient\ for\ pipe\ dimension\ and\ wall\ thickness \\
D_{flowing} &= Internal\ Diameter\ of\ Pipe\ at\ Flowing\ Conditions \\
&= D_{0P}[1+\alpha(T_{flowing}-T_{0P})] \\
\alpha &= Linear\ Coefficient\ of\ Thermal\ Expansion \\
F_{RA} &= Reynolds\ Number\ Factor \\
F_M &= Manometer\ Factor \\
F_{AA} &= Thermal\ Expansion\ Factor \\
F_L &= Location\ Factor \\
\rho_{pps} &= Density, expressed\ in\ Lb/ft^3
\end{aligned}$$

Typical values for some Annubar Factors

Term	Value	Conditions
F_{RA}	1.0	For Diamond II Annubar
F_m	1.0	For electronic transmitters
F_{AA}	1.0	31°F ≤ T ≤ 106°F

DENSITY EQUATIONS

Sarasota Density GM/CC

Sarasota density is calculated using the frequency signal produced by a Sarasota densitometer, and applying temperature and pressure corrections as shown below.

$$\textbf{Corrected Density} = DCF \times \frac{2D_0(t\text{-}T_{0p})}{T_{0p} \times \dfrac{1 + K(t\text{-}T_{0p})}{2T_{0p}}}$$

Where:

$T_{0p} = T_{coef} \times (T - T_{cal}) + P_{coef} \times (P - P_{cal}) + T_0$

DCF = *Density Correction Factor*

D_0 = *Calibration constant, mass/volume, gm/cm*^{3}

t = *Densitometer oscillation period in microseconds.*

t_0 = *A calibration constant in microseconds*

T_{coef} = *Temperature coefficient in microseconds/°F*

P = *Flowing pressure in PSIG*

P_{coef} = *Pressure coefficient in microseconds/PSIG*

P_{cal} = *Calibration pressure in PSIG*

UGC Density GM/CC

UGC density is calculated using the frequency signal produced by a UGC densitometer, and applying temperature and pressure corrections as shown below

Corrected Density $= DCF \times P_{flowing}\{[K(P_{off}+d)\times 10^{-6}]+[K_T(T_{flowing}-T_{cal})] + d\}$

$Where:$

$d = K_0 + K_1 t + K_2 t^2$

$K_0, K_1, K_2 = Calibration\ Constants$

$t = Densitometer\ oscillation\ period\ in\ microseconds$

$DCF = Density\ Correction\ Factor$

$K = Pressure\ Constant$

$P_{off} = Pressure\ Offset$

$K_T = Temperature\ Coefficient$

$T_{cal} = Temperature\ coefficient\ in\ microseconds/°F$

Solartron Density GM/CC

Solartron density is calculated using the frequency signal produced by a Solartron densitometer, and applying temperature and pressure corrections as shown below.

Density at 20 Deg.C and 0 BAR

$$D = K_0 + K_1 t + K_2 t^2$$

Where :

$$t = \text{Densitometer Oscillation Period in microseconds}$$

$$K_0, K_1, K_2 = \text{Calibration Constants Supplied by Solartron}$$

Temperature Corrected Density

$$DT = D[1 + K_{18}(T - 20) + K_{19}(T - 20)]$$

Additional Equation for Gas offset data

The following equation can provide more accurate measurement for Argon/Methane Gas Mixture over density range 60 to 200 kg/m^3.

$$DA = DT + (1 + K3/(DT + K4)x0.00236 - G/(T + 273))$$

G = Gas Specific Gravity / Ratio of Specific Heats.

Density (GM/CC)= Density(KG/M3) / 1000.0

AGA8 Gross Method 1

Refer to Transmission Measurement Committee Report No. 8

AGA8 Gross Method 2

Refer to Transmission Measurement Committee Report No. 8

AGA8 Detail Method

Refer to Transmission Measurement Committee Report No. 8

Steam NBS Equation

Refer to NBS/NRC Steam Tables.

Ethylene NBS1045

Refer to NBS technical Note 1045.

Parahydrogen - NBS 1048

Refer to Journal of physical and chemical reference data (volume 11, 1982, published by the ACS, AIP, NBS)

Oxygen - NBS 1048

Refer to Journal of physical and chemical reference data (volume 11, 1982, published by the ACS, AIP, NBS)

Nitrogen - NBS 1048

Refer to Journal of physical and chemical reference data (volume 11, 1982, published by the ACS, AIP, NBS)

Argon - NBS 1048

Refer to Journal of physical and chemical reference data (volume 11, 1982, published by the ACS, AIP, NBS)

Saturated Steam

Pressure Range 70.3 – 110.3 PSIG

CHAPTER 5: MODBUS DATA

MODBUS PROTOCOL

TRANSMISSION MODE

	ASCII	RTU
DATA BITS	7	8
START BITS	1	1
PARITY	EVEN,ODD	NONE
STOP BITS	1	1
ERROR CHECKING	LRC	CRC
BAUD RATE	1200-9600	1200-9600

ASCII FRAMING

Framing is accomplished by using colon (:) character indicating the beginning of frame and carriage (CR), line feed (LF) for the end of frame

ASCII MESSAGE FORMAT

	ADDRESS	FUNCTION	DATA	ERR\CHECK		
:	2 CHAR	2 CHAR	Nx2 CHAR	2 CHAR	CR	LF
8 BITS	16 BITS	16 BITS	Nx16 BITS	16 BITS	8 BITS	8 BITS

RTU FRAMING

Frame synchronization is done by time basis only. The Smart Flow Computer allows 3.5 characters time without new characters coming in before proceeding to process the message and resetting the buffer.

RTU MESSAGE FORMAT

ADDRESS	FUNCTION	DATA	CRC
8 BITS	8 BITS	Nx8 BITS	16 BITS

FUNCTION CODE

To inform the slave device of what function to perform

FUNCTION CODE	ACTION
01	
03	Read Strings or Multiple 16 Bits
16	Write Strings or Multiple 16 Bits

ERROR CHECK

LRC MODE

The LRC check is transmitted as two ASCII hexadecimal characters. First, the message has to be stripped of the :, LF, CR, and then converted the HEX ASCII to Binary. Add the Binary bits and then two's complement the result.

CRC MODE

The entire message is considered in the CRC mode. Most significant bit is transmitted first. The message is pre-multiplied by 16. The integer quotient digits are ignored and the 16-bit remainder is appended to the message as the two CRC check bytes. The resulting message including the CRC, when divided by the same polynomial (X16+X15+X2+1) at the receiver which will give zero remainder if no error has occurred.

EXCEPTION RESPONSE

Exception response comes from the slave if it finds errors in communication. The slave responds to the master echoing the slave address, function code (with high bit set), exception code and error check. To indicate that the response is notification of an error, the high order bit of the function code is set to 1.

EXCEPTION CODE	DESCRIPTION
01	Illegal Function
02	Illegal Data Address
03	Illegal Data Value

BROADCAST COMMAND

All units listen to Unit ID Zero, and none will respond when that write function is broadcasted.

MODBUS EXAMPLES

FUNCTION CODE 03 (Read Single or Multiple Register Points)

Each Modbus System has a different Modbus address range. For example, 40000 or 90000 is the high level message generated through the host Modbus system. The set up and offset are different for each host Modbus system.

READ A SHORT (SINGLE) WORD NUMERIC VARIABLE

The short word numeric variable is a 16-bit integer
Data: 16 bits (short word: two 8-bit bytes- high byte, low byte),
Short Integer Variable Modbus Address: from 1801 to 3030

RTU MODE - Read Address 3076

ADDR	FUNC CODE	STARTING POINT		# OF POINTS		CRC CHECK	
		HI	LO	HI	LO		
01	03	0C	04	00	01	C6	9B

Response

ADDR	FUNC CODE	BYTE COUNTS	DATA		CRC CHECK	
			HI	LO		
01	03	02	00	01	79	84

ASCII MODE - Read Address 3076

ADDR		FUNC CODE		STARTING POINT				# OF POINTS				LRC CHECK			
				HI		LO		HI		LO					
:	30	31	30	33	30	43	30	43	30	30	30	31	45	42	CR	LF

Response

ADDR		FUNC CODE		BYTE COUNT		DATA				LRC CHECK			
						HI		LO					
:	30	31	30	33	30	32	30	30	30	31	46	39	CR	LF

READ A LONG WORD NUMERIC VARIABLE

The long word numeric variable is a *two 16-bit integers* with decimal inferred
Data: two 16-bit (32 bits, two words: high word, low word).
Sign bit - first bit of high word (0:positive, 1:negative)
Long Integer Variable Modbus Address: from 3131 to 9403

Read Address 3131

ADDR	FUNC CODE	STARTING Address		# OF Registers		CRC CHECK	
		HI	LO	HI	LO		
01	03	0C	3B	00	**02**	B6	96

Response - Data **- 4 Bytes - 00 05 6A 29 (Hex), 611 (Decimal)**

ADDR	FUNC CODE	BYTE COUNTS	**DATA**				CRC CHECK	
			HI Word		**LO Word**			
01	03	04	**00**	**05**	**6A**	**29**	05	4C

Data Bytes - 00 05 6A 29 (Hex) = 354857 (decimal)
Data with 2 decimal places inferred = 3548.57

For Example:
Honeywell Modbus system - read address **93131**
Delta-V Modbus system - read address **43131**
Data Calculation
Value = High Word x 65536 + Low Word
High Word = 00 05 (Hex), 5 (Decimal)
Low Word = 6A 29 (Hex), 27177 (Decimal)
= 5 x 65536 + 27177
= 354857
Two decimal places inferred
= 3548.57

READ A FLOATING POINT VARIABLE

The floating point variable is a single precision floating point value

IEEE Floating Point Format

Sign	Exponent	Mantissa
1 bit	8 bits	23 bits

Byte 3	Byte 2	Byte 1	Byte 0
SEEEEEEE	EMMMMMMM	MMMMMMMM	MMMMMMMM

Modbus Address: From 7001 to 7999

Sample Floating Point Value

Read Register 7047 (**one register with 4 data bytes**)

ADDR	FUNC CODE	STARTING Address		# OF Registers		CRC CHECK	
		HI	LO	HI	LO		
01	03	1B	87	00	**01**	32	C7

Response - Four Data Bytes - **47 6C 4A 00 (HEX) = 60490.0**

ADDR	FUNC CODE	BYTE COUNTS	**DATA**				CRC CHECK	
			HI Word		**LO Word**			
01	03	04	**47**	**6C**	**4A**	**00**	19	FA

Modbus Address Table – 16 Bits Integer

ADDRESS	DESCRIPTION	DECIMAL	READ/WRITE
1801	Gas Chromatograph Unit ID	0 Inferred	Read/Write
1802	Gas Chromatograph Stream Address	0 Inferred	Read/Write
1803	Meter#1 Gas Chromatograph Stream ID	0 Inferred	Read/Write
1804	Meter#2 Gas Chromatograph Stream ID	0 Inferred	Read/Write
1805	Meter#3 Gas Chromatograph Stream ID	0 Inferred	Read/Write
1806	Meter#4 Gas Chromatograph Stream ID	0 Inferred	Read/Write
1807	Variable Type	0 Inferred	Read/Write
1808	Variable#1 Destination	0 Inferred	Read/Write
1809	Variable#2 Destination	0 Inferred	Read/Write
1810	Variable#3 Destination	0 Inferred	Read/Write
1811	Variable#4 Destination	0 Inferred	Read/Write
1812	Variable#5 Destination	0 Inferred	Read/Write
1813	Variable#6 Destination	0 Inferred	Read/Write
1814	Variable#7 Destination	0 Inferred	Read/Write
1815	Variable#8 Destination	0 Inferred	Read/Write
1816	Variable#9 Destination	0 Inferred	Read/Write
1817	Variable#10 Destination	0 Inferred	Read/Write
1818	Variable#11 Destination	0 Inferred	Read/Write
1819	Variable#12 Destination	0 Inferred	Read/Write
1820	Variable#13 Destination	0 Inferred	Read/Write
1821	Variable#14 Destination	0 Inferred	Read/Write
1822	Variable#15 Destination	0 Inferred	Read/Write
1823	Variable#16 Destination	0 Inferred	Read/Write
1824	Variable#17 Destination	0 Inferred	Read/Write
1825	Variable#18 Destination	0 Inferred	Read/Write
1826	Variable#19 Destination	0 Inferred	Read/Write
1827	Variable#20 Destination	0 Inferred	Read/Write
1828	Variable#1 Source Address	0 Inferred	Read/Write
1829	Variable#2 Source Address	0 Inferred	Read/Write
1830	Variable#3 Source Address	0 Inferred	Read/Write
1831	Variable#4 Source Address	0 Inferred	Read/Write
1832	Variable#5 Source Address	0 Inferred	Read/Write
1833	Variable#6 Source Address	0 Inferred	Read/Write
1834	Variable#7 Source Address	0 Inferred	Read/Write
1835	Variable#8 Source Address	0 Inferred	Read/Write
1836	Variable#9 Source Address	0 Inferred	Read/Write
1837	Variable#10 Source Address	0 Inferred	Read/Write
1838	Variable#11 Source Address	0 Inferred	Read/Write
1839	Variable#12 Source Address	0 Inferred	Read/Write
1840	Variable#13 Source Address	0 Inferred	Read/Write
1841	Variable#14 Source Address	0 Inferred	Read/Write
1842	Variable#15 Source Address	0 Inferred	Read/Write
1843	Variable#16 Source Address	0 Inferred	Read/Write
1844	Variable#17 Source Address	0 Inferred	Read/Write
1845	Variable#18 Source Address	0 Inferred	Read/Write
1846	Variable#19 Source Address	0 Inferred	Read/Write
1847	Variable#20 Source Address	0 Inferred	Read/Write
1848	Set Flag to 2 to Activate Gas Chromatograph Port	0 Inferred	Read/Write

Modbus Address Table – 16 Bits Integer

ADDRESS	DESCRIPTION	DECIMAL	READ/WRITE
2534	FC Display Delay	0 Inferred	Read/Write
2535	FC Assignment #1	0 Inferred	Read/Write
2536	FC Assignment #2	0 Inferred	Read/Write
2537	FC Assignment #3	0 Inferred	Read/Write
2538	FC Assignment #4	0 Inferred	Read/Write
2539	FC Assignment #5	0 Inferred	Read/Write
2540	FC Assignment #6	0 Inferred	Read/Write
2541	FC Assignment #7	0 Inferred	Read/Write
2542	FC Assignment #8	0 Inferred	Read/Write
2543	FC Assignment #9	0 Inferred	Read/Write
2544	FC Assignment #10	0 Inferred	Read/Write
2545	FC Assignment #11	0 Inferred	Read/Write
2546	FC Assignment #12	0 Inferred	Read/Write
2547	FC Assignment #13	0 Inferred	Read/Write
2548	FC Assignment #14	0 Inferred	Read/Write
2549	FC Assignment #15	0 Inferred	Read/Write
2550	FC Assignment #16	0 Inferred	Read/Write
2551	Flow Computer ID	0 Inferred	Read/Write
2552	reserved		
2553	Port 1 Modbus Type (0=RTU,1=ASCII)	0 Inferred	Read/Write
2554	Port 1 Parity(0=None,1=Odd,2=Even)	0 Inferred	Read/Write
2555	Port 1 Baud Rate(0=1200,1=2400,3=4800,4=9600)		
2556	reserved		
2557	Port 1 RTS Delay in Milliseconds	0 Inferred	Read/Write
2558-2559	reserved		
2560	Port 2 Type (0=Modbus, 1=Printer)	0 Inferred	Read/Write
2561	Port 2 Modbus Type (0=RTU,1=ASCII)	0 Inferred	Read/Write
2562	Port 2 Parity(0=None,1=Odd,2=Even)	0 Inferred	Read/Write
2563	Port 2 Baud Rate(0=1200,1=2400,3=4800,4=9600)		
2564	Printer Baud Rate	0 Inferred	Read/Write
2565	Port 2 RTS Delay in Milliseconds	0 Inferred	Read/Write
2566	Printer - Number of Nulls	0 Inferred	Read/Write
2567	Spare	0 Inferred	Read/Write
2568	Spare		
2569	Meter Bank 0=One Meter,1=Two Meters	0 Inferred	Read/Write
2570	Select 0=Single, 1=Dual Streams	0 Inferred	Read/Write
2571	Station Total 0=None,1=Add,2=Sub	0 Inferred	Read/Write
2572	Meter #1 Use Stack DP (1=Yes)	0 Inferred	Read/Write
2573	Meter #2 Use Stack DP (1=Yes)	0 Inferred	Read/Write
2574	Common Temperature 1=Yes	0 Inferred	Read/Write
2575	Common Pressure 1=Yes	0 Inferred	Read/Write

Modbus Address Table – 16 Bits Integer

ADDRESS	DESCRIPTION	DECIMAL	READ/WRITE
2576	Density#1 0=None,1=4-20mA,2=S,3=U,3=S	0 Inferred	Read/Write
2577	Spare		
2578	Use Meter Temp as Dens.Temp#1 0=N,1=Y	0 Inferred	Read/Write
2579	Spare		
2580	Common Density 1=Yes	0 Inferred	Read/Write
2581	Density#2 0=None,1=4-20mA,2=S,3=U,3=S	0 Inferred	Read/Write
2582	Spare		
2583	Use Meter Temp#2 as Dens.Temp 1=Yes	0 Inferred	Read/Write
2584	Spare		
2585-2589	Reserved		
2591-2592	Spare		
2593	Flow Rate Display 0=Hour,1=Day,2=Minute	0 Inferred	Read/Write
2594	Flow Rate Averaged Seconds (1-10)	0 Inferred	Read/Write
2595	Day Start Hour (0-23)	0 Inferred	Read/Write
2596-2605	Company Name	40 Chars	Read/Write
2606	Disable Alarms ? (0=No, 1=Yes)	0 Inferred	Read/Write
2607	Print Interval in Minutes (0-1440)	0 Inferred	Read/Write
2608	Run Switch Delay	0 Inferred	Read/Write
2609	Pulse Width	0 Inferred	Read/Write
2610-2616	Spare		
2617	Status Input/Switch Output #1 (0=OFF,1=ON)	0 Inferred	Read/Write
2618	Status Input/Switch Output #2 (0=OFF,1=ON)	0 Inferred	Read/Write
2619	Status Input/Switch Output #3 (0=OFF,1=ON)	0 Inferred	Read/Write
2620	Status Input/Switch Output #4 (0=OFF,1=ON)	0 Inferred	Read/Write
2621	Spare		
2622	Meter #1 Flow Cut Off Freq. (0-99)	0 Inferred	Read/Write
2623	Meter #2 Flow Cut Off Freq. (0-99)	0 Inferred	Read/Write
2624-2633	Meter Location	40 Chars.	Read/Write
2634-2637	Meter #1 ID	8 Chars.	Read/Write
2638	Meter#1 Product	0 Inferred	Read/Write
2639	Spare		
2640-2643	Meter #2 ID	8 Chars.	Read/Write
2644	Meter#2 Product	0 Inferred	Read/Write
2645-2670	Spare		
2671	Meter#1 PID Auto/Manual	0 Inferred	Read/Write
2672	Meter#1 PID Flow Loop Used (1=Yes)	0 Inferred	Read/Write
2673	Meter#1 PID Flow Direct/Reverse Act	0 Inferred	Read/Write
2674	Meter#1 PID Pressure Loop Used (1=Yes)	0 Inferred	Read/Write
2675	Meter#1 PID Pressure Direct/Reverse Act	0 Inferred	Read/Write
2676	Meter#1 PID Flow Loop in Service	0 Inferred	Read/Write
2677	Meter#1 PID Pressure Loop in Service	0 Inferred	Read/Write
2678	Meter#1 PID 0=Low,1=High Signal	0 Inferred	Read/Write
2679	Meter#1 PID Flow Base 0=Gross,1=Net,2=Mass	0 Inferred	Read/Write
2680	Meter#2 PID Auto/Manual	0 Inferred	Read/Write
2681	Meter#2 PID Flow Loop Used (1=Yes)	0 Inferred	Read/Write
2682	Meter#2 PID Flow Direct/Reverse Act	0 Inferred	Read/Write
2683	Meter#2 PID Pressure Loop Used (1=Yes)	0 Inferred	Read/Write
2684	Meter#2 PID Pressure Direct/Reverse Act	0 Inferred	Read/Write
2685	Meter#2 PID Flow Loop in Service	0 Inferred	Read/Write
2686	Meter#2 PID Pressure Loop in Service	0 Inferred	Read/Write
2687	Meter#2 PID 0=Low,1=High Signal	0 Inferred	Read/Write
2688	Meter#2 PID Flow Base 0=Gross,1=Net,2=Mass	0 Inferred	Read/Write
2688-2797	Spare		

Modbus Address Table – 16 Bits Integer

ADDRESS	DESCRIPTION	DECIMAL	READ/WRITE
2798	Meter #1 DP Low Assignment	0 Inferred	Read/Write
2799	Meter #1 Temperature Assignment	0 Inferred	Read/Write
2800	Meter #1 Pressure Assignment	0 Inferred	Read/Write
2801	Meter #1 Density Assignment	0 Inferred	Read/Write
2802	Meter #1 Density Temp. Assignment	0 Inferred	Read/Write
2803	Meter #1 DP High Assignment	0 Inferred	Read/Write
2804	Meter #2 DP Low Assignment	0 Inferred	Read/Write
2805	Meter #2 Temperature Assignment	0 Inferred	Read/Write
2806	Meter #2 Pressure Assignment	0 Inferred	Read/Write
2807	Meter #2 Density Assignment	0 Inferred	Read/Write
2808	Meter #2 Density Temp. Assignment	0 Inferred	Read/Write
2809	Meter #2 DP High Assignment	0 Inferred	Read/Write
2810	Spare #1 Assignment	0 Inferred	Read/Write
2811	Spare #2 Assignment	0 Inferred	Read/Write
2812	Meter #1 DP Low Fail Code	0 Inferred	Read/Write
2813	Meter #1 Temperature Fail Code	0 Inferred	Read/Write
2814	Meter #1 Pressure Fail Code	0 Inferred	Read/Write
2815	Meter #1 Density Fail Code	0 Inferred	Read/Write
2816	Meter #1 Density Temp Fail Code	0 Inferred	Read/Write
2817	Spare		
2818	Meter #2 DP Low Fail Code	0 Inferred	Read/Write
2819	Meter #2 Temperature Fail Code	0 Inferred	Read/Write
2820	Meter #2 Pressure Fail Code	0 Inferred	Read/Write
2821	Meter #2 Density Fail Code	0 Inferred	Read/Write
2822	Meter #2 Density Temp Fail Code	0 Inferred	Read/Write
2823	Spare		
2824	Spare #1 Failure Code	0 Inferred	Read/Write
2825	Spare #2 Failure Code	0 Inferred	Read/Write
2826	Analog Output #1 Assign	0 Inferred	Read/Write
2827	Analog Output #2 Assign	0 Inferred	Read/Write
2829	Analog Output #3 Assign	0 Inferred	Read/Write
2830	Analog Output #4 Assign	0 Inferred	Read/Write
2831	Meter#1 NX19 Method (1=Analysis Method)	0 Inferred	Read/Write
2832	Meter#2 NX19 Method (1=Analysis Method)	0 Inferred	Read/Write
2833	Meter #1 Nozzle Type	0 Inferred	Read/Write
2834	Meter#1 Y Factor Select (1=Y1, 2=Y2)	0 Inferred	Read/Write
2835	Meter#1 Tap Select (0=Flange, 1=Pipe)	0 Inferred	Read/Write
2836	Meter#2 Y Factor Select (1=Y1, 2=Y2)	0 Inferred	Read/Write
2837	Meter#2 Tap Select (0=Flange, 1=Pipe)	0 Inferred	Read/Write
2838	Meter#1 Calculation Method	0 Inferred	Read/Write
2839	Meter#2 Calculation Method	0 Inferred	Read/Write
2840	Meter#2 Nozzle Type	0 Inferred	Read/Write
2841-2844	Analog Input #1 Tag Name	8 Chars	Read/Write
2845-2848	Analog Input #2 Tag Name	8 Chars	Read/Write
2849-2852	Analog Input #3 Tag Name	8 Chars	Read/Write
2853-2856	Analog Input #4 Tag Name	8 Chars	Read/Write
2857-2860	RTD Input Tag Name	8 Chars	Read/Write
2861-2864	Densitometer Tag Name	8 Chars	Read/Write
2865-2868	Analog Output #1 Tag Name	8 Chars	Read/Write
2869-2872	Analog Output #2 Tag Name	8 Chars	Read/Write
2873-2876	Analog Output #3 Tag Name	8 Chars	Read/Write
2877-2880	Analog Output #3 Tag Name	8 Chars	Read/Write
2881-2932	Spare		

Modbus Address Table – 16 Bits Integer

ADDRESS	DESCRIPTION	DECIMAL	READ/WRITE
2933	Status Input/Switch Output #1 Assign	0 Inferred	Read/Write
2934	Status Input/Switch Output #2 Assign	0 Inferred	Read/Write
2935	Status Input/Switch Output #3 Assign	0 Inferred	Read/Write
2936	Status Input/Switch Output #4 Assign	0 Inferred	Read/Write
2961-2964	Multivariable DP Tag	8 Chars.	Read/Write
2965-2968	Multivariable Pressure Tag	8 Chars.	Read/Write
2969-2972	Multivariable Temperature Tag	8 Chars.	Read/Write
2972-2984	Spare		
2985	Analog Output #1 Remote Control (0-100)	0 Inferred	Read/Write
2986	Analog Output #2 Remote Control (0-100)	0 Inferred	Read/Write
2987	Analog Output #3 Remote Control (0-100)	0 Inferred	Read/Write
2988	Analog Output #4 Remote Control (0-100)	0 Inferred	Read/Write
2989-2990	Spare		
2991	Reset PID	0 Inferred	Read/Write

Modbus Address Table – 16 Bits Integer

ADDRESS	DESCRIPTION	DECIMAL	READ/WRITE
3001	Version Number	2 Inferred	Read
3002-3006	Spare		
3007	Meter #1 Product Used	0 Inferred	Read
3008-3011	Meter #1 ID	8 Chars	Read
3012	Spare		
3013	Meter #2 Product Used	0 Inferred	Read
3014-3017	Meter #2 ID	8 Chars	Read
3018	Flow Computer Unit Number	0 Inferred	Read
3019	Disable Alarms (1=Yes)	0 Inferred	Read
3020-3025 Spare			
3026	Last Daily Report Request Set Request Data (3787) to zero Set Last Daily Report Request to 1=Latest, 35=Oldtest Daily Data Area in Location 3431-3703	0 Inferred	Write
3027	Last Monthly Report Request Set Last Monthly Report Request to 1=Latest, 12=Oldtest Monthly Data Area in Location 3431-3703	0 Inferred	Write
3029	Last Hourly Report Request Set Last Hourly Report Request to 1=Latest,840=Oldest	0 Inferred	Write
3030-3031 Reserved			

Modbus Address Table – 16 Bits Integer

ADDRESS	DESCRIPTION	DECIMAL	READ/WRITE
Scaled Data Area			
3032	Meter #1 Gross Flow Rate	0 Inferred	Read
3033	Meter #1 Net Flow Rate	0 Inferred	Read
3034	Meter #1 Mass Flow Rate	0 Inferred	Read
3035	Meter #1 Energy Flow Rate	0 Inferred	Read
3036-3043	Spare		
3044	Meter #2 Gross Flow Rate	0 Inferred	Read
3045	Meter #2 Net Flow Rate	0 Inferred	Read
3046	Meter #2 Mass Flow Rate	0 Inferred	Read
3047	Meter #2 Energy Flow Rate	0 Inferred	Read
3048-3055	Spare		
3056	Spare #1 Data	0 Inferred	Read
3057	Spare #2 Data	0 Inferred	Read
3058	Meter #1 DP	0 Inferred	Read
3059	Meter #1 Temperature	0 Inferred	Read
3060	Meter #1 Pressure	0 Inferred	Read
3061	Meter #1 Density	0 Inferred	Read
3062	Meter #1 Dens.Temperature	0 Inferred	Read
3063	Meter #2 DP	0 Inferred	Read
3064	Meter #2 Temperature	0 Inferred	Read
3065	Meter #2 Pressure	0 Inferred	Read
3066	Meter #2 Density	0 Inferred	Read
3067	Meter #2 Dens.Temperature	0 Inferred	Read

Scale value use high limit parameters.
Example:
Current meter#1 temperature reading is 80 Degree F

Meter#1 Temperature High Limit Data Entry	32767
Value of Modbus Register <3059>	80

Scaled Data Area Ends

3121	GC Communication Status (1=Failed, 0=OK)	0 Inferred	Read
3122	GC Mol Percentage (1=Out of Range, 0=OK)	0 Inferred	Read

Modbus 16-bit Address Table Ends

Modbus Address Table – 2x16 Bits Integer

ADDRESS	DESCRIPTION	DECIMAL	READ/WRITE
3131	Meter #1 Gross Flow Rate	2 inferred	Read
3133	Meter #1 Net Flow Rate	2 inferred	Read
3135	Meter #1 Mass Flow Rate	2 inferred	Read
3137	Meter #1 Energy Flow Rate	2 inferred	Read
3139	Meter #1 DP Low	4 Inferred	Read
3141	Meter #1 DP High	4 Inferred	Read
3143	Meter #1 DP	4 Inferred	Read
3145	Meter #1 Temperature	1 Inferred	Read
3147	Meter #1 Pressure	1 Inferred	Read
3149	Meter #1 Density	6 Inferred	Read
3151	Meter #1 Density Temperature	1 Inferred	Read
3153	Meter #1 Density.b	6 Inferred	Read
3155	Meter #1 SG	6 Inferred	Read
3157	Meter #1 Y Factor	6 Inferred	Read
3159	Meter #1 K/CD/LMF	6 Inferred	Read
3161	Meter #1 FA	6 Inferred	Read
3163	Meter #1 FPV/FRA	6 Inferred	Read
3165	Meter #1 Meter Factor	6 Inferred	Read
3167	Meter #1 Linear Factor	6 Inferred	Read
3169-3171	Spare		
3173	Meter #1 Daily Gross Total	1 inferred	Read
3175	Meter #1 Daily Net Total	1 inferred	Read
3177	Meter #1 Daily Mass Total	1 Inferred	Read
3179	Meter #1 Daily Energy Total	1 Inferred	Read
3181	Meter #1 Cumulative Gross Total	1 Inferred	Read
3183	Meter #1 Cumulative Net Total	1 Inferred	Read
3185	Meter #1 Cumulative Mass Total	1 Inferred	Read
3187	Meter #1 Cumulative Energy Total	1 Inferred	Read
3189	Meter #1 Previous Hourly Premium Total - Base	1 Inferred	Read
3191	Meter #1 Previous Hourly Premium Total – P1	1 Inferred	Read
3193	Meter #1 Previous Hourly Premium Total – P2	1 Inferred	Read
3195	Meter #1 Previous Hourly Premium Total – P3	1 Inferred	Read
3197	Meter #1 Previous Hourly Premium Total – P4	1 Inferred	Read
3199-3203	Spare		
3205	Meter #2 Gross Flow Rate	2 Inferred	Read
3207	Meter #2 Net Flow Rate	2 Inferred	Read
3209	Meter #2 Mass Flow Rate	2 Inferred	Read
3211	Meter #2 Energy Flow Rate	2 Inferred	Read
3213	Meter #2 DP Low	4 Inferred	Read
3215	Meter #2 DP High	4 Inferred	Read
3217	Meter #2 DP	4 Inferred	Read
3219	Meter #2 Temperature	1 Inferred	Read

Modbus Address Table – 2x16 Bits Integer

ADDRESS	DESCRIPTION	DECIMAL	READ/WRITE
3221	Meter #2 Pressure	1 Inferred	Read
3223	Meter #2 Density	6 Inferred	Read
3225	Meter #2 Density Temperature	1 Inferred	Read
3227	Meter #2 Density.b	6 Inferred	Read
3229	Meter #2 SG	6 Inferred	Read
3231	Meter #2 Y Factor	6 Inferred	Read
3233	Meter #2 K/CD/LMF	6 Inferred	Read
3235	Meter #2 FA	6 Inferred	Read
3237	Meter #2 FPV/FRA	6 Inferred	Read
3239	Meter #2 Meter Factor	6 Inferred	Read
3241	Meter #2 Linear Factor	6 Inferred	Read
3243-3245	Spare		
3247	Meter #2 Daily Gross Total	1 Inferred	Read
3249	Meter #2 Daily Net Total	1 Inferred	Read
3251	Meter #2 Daily Mass Total	1 Inferred	Read
3253	Meter #2 Daily Energy Total	1 Inferred	Read
3255	Meter #2 Cumulative Gross Total	1 Inferred	Read
3257	Meter #2 Cumulative Net Total	1 Inferred	Read
3259	Meter #2 Cumulative Mass Total	1 Inferred	Read
3261	Meter #2 Cumulative Energy Total	1 Inferred	Read
3263	Meter #2 Previous Hourly Premium Total - Base	1 Inferred	Read
3265	Meter #2 Previous Hourly Premium Total – P1	1 Inferred	Read
3267	Meter #2 Previous Hourly Premium Total – P2	1 Inferred	Read
3269	Meter #2 Previous Hourly Premium Total – P3	1 Inferred	Read
3271	Meter #2 Previous Hourly Premium Total – P4	1 Inferred	Read
3273	Spare		
3279	Station Gross Flow Rate	2 Inferred	Read
3281	Station Net Flow Rate	2 Inferred	Read
3283	Station Mass Flow Rate	2 Inferred	Read
3285	Station Energy Flow Rate	2 Inferred	Read
3287	Station Daily Gross Total	1 Inferred	Read
3289	Station Daily Net Total	1 Inferred	Read
3291	Station Daily Mass Total	1 Inferred	Read
3293	Station Daily. Energy Total	1 Inferred	Read
3295	Station Cum. Gross Total	1 Inferred	Read
3297	Station Cum. Net Total	1 Inferred	Read
3299	Station Cum. Mass Total	1 Inferred	Read
3301	Station Cum. Energy Total	1 Inferred	Read
3302-3317	Spare		
3319	Meter #1 Hourly Gross Total	1 Inferred	Read
3321	Meter #1 Hourly Net Total	1 Inferred	Read
3323	Meter #1 Hourly Mass Total	1 Inferred	Read
3325	Meter #1 Hourly Energy Total	1 Inferred	Read
3327	Meter #2 Hourly Gross Total	1 Inferred	Read
3329	Meter #2 Hourly Net Total	1 Inferred	Read
3331	Meter #2 Hourly Mass Total	2 Inferred	Read
3333	Meter #2 Hourly Energy Total	1 Inferred	Read
3335	Meter #1 Monthly Gross Total	1 Inferred	Read
3337	Meter #1 Monthly Net Total	1 Inferred	Read

Modbus Address Table – 2x16 Bits Integer

ADDRESS	DESCRIPTION	DECIMAL	READ/WRITE
3339	Meter #1 Monthly Mass Total	1 Inferred	Read
3341	Meter #1 Monthly Energy Total	1 Inferred	Read
3343	Meter #2 Monthly Gross Total	1 Inferred	Read
3345	Meter #2 Monthly Net Total	1 Inferred	Read
3347	Meter #2 Monthly Mass Total	2 Inferred	Read
3349	Meter #2 Monthly Energy Total	1 Inferred	Read
3351	Station Previous Hourly Premium Total - Base	1 Inferred	Read
3353	Station Previous Hourly Premium Total – P1	1 Inferred	Read
3355	Station Previous Hourly Premium Total – P2	1 Inferred	Read
3357	Station Previous Hourly Premium Total – P3	1 Inferred	Read
3359	Station Previous Hourly Premium Total – P4	1 Inferred	Read
3361-3381	Spare		
3383	Spare #1 Data	4 Inferred	Read
3385	Spare #2 Data	4 Inferred.	Read
3387	Analog Output #1 Output %	2 Inferred	Read
3389	Analog Output #2 Output %	2 Inferred	Read
3391	Meter #1 Uncorrected Density	6 Inferred	Read
3393	Meter #2 Uncorrected Density	6 Inferred	Read
3395-3409	Spare		
3411	Analog Output #3 Output %	2 Inferred	Read
3413	Analog Output #4 Output %	2 Inferred	Read

Modbus Address Table – 2x16 Bits Integer

Last Daily or Monthly Data Area

Set Last Daily Report Request (3026) to 1=Latest,35=Oldtest
(3026,16bits Integer,Write only)
Daily Data Area in Location 3431-3753 (2x16bits Integers,Read only)

Set Last Monthly Report Request (3027) to 1=Latest,12=Oldtest
(3026,16bits Integer,Write only)
Monthly Data Area in Location 3431-3753 (2x16bits Integers,Read only)

ADDRESS	DESCRIPTION	DECIMAL	READ/WRITE
3431	Batch Type/Disp/Bank/Station Flag	0 Inferred	Read
3433	Meter #1 Density Calculation Type	0 Inferred	Read
3435	Meter #2 Density Calculation Type	0 Inferred	Read
3437	Day/Month Start Date	0 Inferred	Read
3439	Day/Month Start Time	0 Inferred	Read
3441	Day/Month End Date	0 Inferred	Read
3443	Day/Month End Time	0 Inferred	Read
3445	Meter #1 Cum. Gross Total	0 Inferred	Read
3447	Meter #1 Cum. Net Total	0 Inferred	Read
3449	Meter #1 Cum. Mass Total	0 Inferred	Read
3451	Meter #1 Cum. Energy Total	0 Inferred	Read
3453	Meter #1 Daily/Monthly Gross Total	0 Inferred	Read
3455	Meter #1 Daily/Monthly Net Total	0 Inferred	Read
3457	Meter #1 Daily/Monthly Mass Total	0 Inferred	Read
3459	Meter #1 Daily/Monthly Energy Total	0 Inferred	Read
3461	Meter #1 FWA DP	4 Inferred	Read
3463	Meter #1 FWA Temperature	1 Inferred	Read
3465	Meter #1 FWA Pressure	1 Inferred	Read
3467	Meter #1 FWA Density	6 Inferred	Read
3469	Meter #1 FWA Density Temp	1 Inferred	Read
3471	Meter #1 FWA Dens.b	6 Inferred	Read
3473	Meter #1 FWA SG	6 Inferred	Read
3475	Meter #1 FWA Y Factor	6 Inferred	Read
3477	Meter #1 FWA K/CD/IMF	6 Inferred	Read
3479	Meter #1 FWA FPV/FRA	6 Inferred	Read
3481	Meter #1 FWA FA	6 Inferred	Read
3483-3485	Spare		
3487	Meter #1 Daily/Monthly Premium Total - Base	1 Inferred	Read
3489	Meter #1 Daily/Monthly Premium Total – P1	1 Inferred	Read
3491	Meter #1 Daily/Monthly Premium Total – P2	1 Inferred	Read
3493	Meter #1 Daily/Monthly Premium Total – P3	1 Inferred	Read
3495	Meter #1 Daily/Monthly Premium Total – P4	1 Inferred	Read
3497	Reserved		
3499	Meter #1 Cum. Premium Total - Base	1 Inferred	Read
3501	Meter #1 Cum. Premium Total – P1	1 Inferred	Read
3503	Meter #1 Cum. Premium Total – P2	1 Inferred	Read
3505	Meter #1 Cum. Premium Total – P3	1 Inferred	Read
3507	Meter #1 Cum. Premium Total – P4	1 Inferred	Read
3509	Reserved		
3511-3527	Spare		

Modbus Address Table – 2x16 Bits Integer

ADDRESS	DESCRIPTION	DECIMAL	READ/WRITE
3529-3531	Meter #1 ID	8 Chars.	Read
3533	Meter #1 Pipe ID	5 Inferred	Read
3535	Meter #1 Orifice ID	5 Inferred	Read
3537	Meter #1 Density Correction Factor	5 Inferred	Read
3539	Meter #1 Density Dry Air	5 Inferred	Read
3541	Meter #1 Calculation Type	0 Inferred	Read
3543	Meter #1 Heating Value BTU/FT3	3 Inferred	Read
3545	Meter #1 K Factor	3 Inferred	Read
3547-3553	Spare		
3555	Meter #2 Cum. Gross Total	0 Inferred	Read
3557	Meter #2 Cum. Net Total	0 Inferred	Read
3559	Meter #2 Cum. Mass Total	0 Inferred	Read
3561	Meter #2 Cum. Energy Total	0 Inferred	Read
3563	Meter #2 Daily/Monthly Gross Total	0 Inferred	Read
3565	Meter #2 Daily/Monthly Net Total	0 Inferred	Read
3567	Meter #2 Daily/Monthly Mass Total	0 Inferred	Read
3569	Meter #2 Daily/Monthly Energy Total	0 Inferred	Read
3571	Meter #2 FWA DP	4 Inferred	Read
3573	Meter #2 FWA Temperature	1 Inferred	Read
3575	Meter #2 FWA Pressure	1 Inferred	Read
3577	Meter #2 FWA Density	6 Inferred	Read
3579	Meter #2 FWA Density Temp	1 Inferred	Read
3581	Meter #2 FWA Density.b	6 Inferred	Read
3583	Meter #2 FWA SG	6 Inferred	Read
3585	Meter #2 FWA Y Factor	6 Inferred	Read
3587	Meter #2 FWA K/CD/LMF	6 Inferred	Read
3589	Meter #2 FWA FPV	6 Inferred	Read
3591	Meter #2 FWA FA	6 Inferred	Read
3593-3595	Spare		
3597	Meter #2 Daily/Monthly Premium Total - Base	1 Inferred	Read
3599	Meter #2 Daily/Monthly Premium Total – P1	1 Inferred	Read
3601	Meter #2 Daily/Monthly Premium Total – P2	1 Inferred	Read
3603	Meter #2 Daily/Monthly Premium Total – P3	1 Inferred	Read
3605	Meter #2 Daily/Monthly Premium Total – P4	1 Inferred	Read
3607	Reserved		
3609	Meter #2 Cum. Premium Total - Base	1 Inferred	Read
3611	Meter #2 Cum. Premium Total – P1	1 Inferred	Read
3613	Meter #2 Cum. Premium Total – P2	1 Inferred	Read
3615	Meter #2 Cum. Premium Total – P3	1 Inferred	Read
3617	Meter #2 Cum. Premium Total – P4	1 Inferred	Read
3619	Reserved		
3621-3637	Spare		
3639-3641	Meter #2 ID	8 Chars.	Read
3643	Meter #2 Pipe ID	5 Inferred	Read
3645	Meter #2 Orifice ID	5 Inferred	Read
3647	Meter #2 Density Correction Factor	5 Inferred	Read
3649	Meter #2 Density Dry Air	5 Inferred	Read
3651	Meter #2 Calculation Type	0 Inferred	Read
3653	Meter #2 Heating Value BTU/FT3	3 Inferred	Read
3655	Meter #2 K Factor	3 Inferred	Read

Modbus Address Table – 2x16 Bits Integer

ADDRESS	DESCRIPTION	DECIMAL	READ/WRITE
3657-3663	Spare		
3665	Station Cum. Gross Total	0 Inferred	Read
3667	Station Cum. Net Total	0 Inferred	Read
3669	Station Cum. Mass Total	0 Inferred	Read
3671	Station Cum Energy Total	0 Inferred	Read
3673	Station Daily/Monthly Gross Total	0 Inferred	Read
3675	Station Daily/Monthly Net Total	0 Inferred	Read
3677	Station Daily/Monthly Mass Total	0 Inferred	Read
3679	Station Daily/Monthly Energy Total	0 Inferred	Read
3681	Station Daily/Monthly Premium Total - Base	1 Inferred	Read
3683	Station Daily/Monthly Premium Total – P1	1 Inferred	Read
3685	Station Daily/Monthly Premium Total – P2	1 Inferred	Read
3687	Station Daily/Monthly Premium Total – P3	1 Inferred	Read
3689	Station Daily/Monthly Premium Total – P4	1 Inferred	Read
3691	Reserved		
3693	Station Cum. Premium Total - Base	1 Inferred	Read
3695	Station Cum. Premium Total – P1	1 Inferred	Read
3697	Station Cum. Premium Total – P2	1 Inferred	Read
3699	Station Cum. Premium Total – P3	1 Inferred	Read
3701	Station Cum. Premium Total – P4	1 Inferred	Read
3703	Reserved		
3705	Spare #1	4 Inferred	Read
3707	Spare #2	4 Inferred	Read

Last Daily or Monthly Data Area Ends

Modbus Address Table – 2x16 Bits Integer

ADDRESS	DESCRIPTION	DECIMAL	READ/WRITE
3767-3785	Reserved		
3787-4149	Reserved		
4151	Meter #1 Densitometer Period	3 Inferred	Read
4153	Meter #2 Densitometer Period	3 Inferred	Read
4155-4199	Spare		
4201	Date (MMDDYY)	0 Inferred	Read/Write
4203	Time (HHMMSS)	0 Inferred	Read/Write
4205-4243	Spare		

NX19 Method

4245	Meter#1 Mol Percentage of Methane	4 Inferred	Read/Write
4247	Meter#1 Mol Percentage of Ethane	4 Inferred	Read/Write
4249	Meter#1 Mol Percentage of Propane	4 Inerred	Read/Write
4251	Meter#1 Mol Percentage of Iso-Butane	4 Inferred	Read/Write
4253	Meter#1 Mol Percentage of N-Butane	4 Inferred	Read/Write
4255	Meter#1 Mol Percentage of Iso-Pentane	4 Inferred	Read/Write
4257	Meter#1 Mol Percentage of N-Pentane	4 Inferred	Read/Write
4259	Meter#1 Mol Percentage of N-Hexane	4 Inferred	Read/Write
4261	Meter#1 Mol Percentage of Heptane	4 Inferred	Read/Write
4263	Meter#1 Mol Percentage of N-Octane	4 Inferred	Read/Write
4265	Meter#1 Mol Percentage of CO2	4 Inferred	Read/Write
4267	Meter#1 Mol Percentage of N2	4 Inferred	Read/Write
4269-4285	Spare		
4287	Meter#2 Mol Percentage of Methane	4 Inferred	Read/Write
4289	Meter#2 Mol Percentage of Ethane	4 Inferred	Read/Write
4291	Meter#2 Mol Percentage of Propane	4 Inerred	Read/Write
4293	Meter#2 Mol Percentage of Iso-Butane	4 Inferred	Read/Write
4295	Meter#2 Mol Percentage of N-Butane	4 Inferred	Read/Write
4297	Meter#2 Mol Percentage of Iso-Pentane	4 Inferred	Read/Write
4299	Meter#2 Mol Percentage of N-Pentane	4 Inferred	Read/Write
4301	Meter#2 Mol Percentage of N-Hexane	4 Inferred	Read/Write
4303	Meter#2 Mol Percentage of Heptane	4 Inferred	Read/Write
4305	Meter#2 Mol Percentage of N-Octane	4 Inferred	Read/Write
4307	Meter#2 Mol Percentage of CO2	4 Inferred	Read/Write
4309	Meter#2 Mol Percentage of N2	4 Inferred	Read/Write
4311-4327	Spare		

Modbus Address Table – 2x16 Bits Integer

ADDRESS	DESCRIPTION	DECIMAL	READ/WRITE
AGA 8 GROSS METHOD 1			
4245	Meter#1 Mol % of Carbon Dioxide	4 Inferred	Read/Write
4247	Meter#1 Mol % of Hydrogen	4 Inferred	Read/Write
4249	Meter#1 Mol % of Carbon Monoxide	4 Inferred	Read/Write
4251-4285	Spare		
4287	Meter#2 Mol % of Carbon Dioxide	4 Inferred	Read/Write
4289	Meter#2 Mol % of Hydrogen	4 Inferred	Read/Write
4291	Meter#2 Mol % of Carbon Monoxide	4 Inferred	Read/Write
4293-4327	Spare		
AGA 8 GROSS METHOD 2			
4245	Meter#1 Mol % of Nitrogen	4 Inferred	Read/Write
4247	Meter#1 Mol % of Carbon Dioxide	4 Inferred	Read/Write
4249	Meter#1 Mol % of Hydrogen	4 Inferred	Read/Write
4251	Meter#1 Mol % of Carbon Monoxide	4 Inferred	Read/Write
4253-4285	Spare		
4287	Meter#2 Mol % of Nitrogen	4 Inferred	Read/Write
4289	Meter#2 Mol % of Carbon Dioxide	4 Inferred	Read/Write
4291	Meter#2 Mol % of Hydrogen	4 Inferred	Read/Write
4293	Meter#2 Mol % of Carbon Monoxide	4 Inferred	Read/Write
4295-4327	Spare		

Modbus Address Table – 2x16 Bits Integer

ADDRESS	DESCRIPTION	DECIMAL	READ/WRITE
AGA 8 Detail Method			
4245	Meter#1 Mol % of Methane	4 Inferred	Read/Write
4247	Meter#1 Mol % of Nitrogen	4 Inferred	Read/Write
4249	Meter#1 Mol % of Carbon Dioxide	4 Inferred	Read/Write
4251	Meter#1 Mol % of Ethane	4 Inferred	Read/Write
4253	Meter#1 Mol % of Propane	4 Inferred	Read/Write
4225	Meter#1 Mol % of Water	4 Inferred	Read/Write
4257	Meter#1 Mol % of Hydrogen Sulfide	4 Inferred	Read/Write
4259	Meter#1 Mol % of Hydrogen	4 Inferred	Read/Write
4261	Meter#1 Mol % of Carbon Monoxide	4 Inferred	Read/Write
4263	Meter#1 Mol % of Oxygen	4 Inferred	Read/Write
4265	Meter#1 Mol % of i-Butane	4 Inferred	Read/Write
4267	Meter#1 Mol % of n-Butane	4 Inferred	Read/Write
4269	Meter#1 Mol % of i-Pentane	4 Inferred	Read/Write
4271	Meter#1 Mol % of n-Pentane	4 Inferred	Read/Write
4273	Meter#1 Mol % of i-Hexane	4 Inferred	Read/Write
4275	Meter#1 Mol % of n-Heptane	4 Inferred	Read/Write
4277	Meter#1 Mol % of i-Octane	4 Inferred	Read/Write
4279	Meter#1 Mol % of i-Nonane	4 Inferred	Read/Write
4281	Meter#1 Mol % of i-Decane	4 Inferred	Read/Write
4283	Meter#1 Mol % of Helium	4 Inferred	Read/Write
4285	Meter#1 Mol % of Argon	4 Inferred	Read/Write
4287	Meter#2 Mol % of Methane	4 Inferred	Read/Write
4289	Meter#2 Mol % of Nitrogen	4 Inferred	Read/Write
4291	Meter#2 Mol % of Carbon Dioxide	4 Inferred	Read/Write
4293	Meter#2 Mol % of Ethane	4 Inferred	Read/Write
4295	Meter#2 Mol % of Propane	4 Inferred	Read/Write
4297	Meter#2 Mol % of Water	4 Inferred	Read/Write
4299	Meter#2 Mol % of Hydrogen Sulfide	4 Inferred	Read/Write
4301	Meter#2 Mol % of Hydrogen	4 Inferred	Read/Write
4303	Meter#2 Mol % of Carbon Monoxide	4 Inferred	Read/Write
4305	Meter#2 Mol % of Oxygen	4 Inferred	Read/Write
4307	Meter#2 Mol % of i-Butane	4 Inferred	Read/Write
4309	Meter#2 Mol % of n-Butane	4 Inferred	Read/Write
4311	Meter#2 Mol % of i-Pentane	4 Inferred	Read/Write
4313	Meter#2 Mol % of n-Pentane	4 Inferred	Read/Write
4315	Meter#2 Mol % of i-Hexane	4 Inferred	Read/Write
4317	Meter#2 Mol % of n-Heptane	4 Inferred	Read/Write
4319	Meter#2 Mol % of i-Octane	4 Inferred	Read/Write
4321	Meter#2 Mol % of i-Nonane	4 Inferred	Read/Write
4323	Meter#2 Mol % of i-Decane	4 Inferred	Read/Write
4325	Meter#2 Mol % of Helium	4 Inferred	Read/Write
4327	Meter#2 Mol % of Argon	4 Inferred	Read/Write

AGA 8 Detail Method Ends

Modbus Address Table – 2x16 Bits Integer

ADDRESS	DESCRIPTION	DECIMAL	READ/WRITE
4329	Meter #1 Heating Value BTU/FT3	3 Inferred	Read/Write
4331	Meter #2 Heating Value BTU/FT3	3 Inferred	Read/Write
4333	Meter #1 FPV Override	6 Inferred	Read/Write
4335	Meter #2 FPV Override	6 Inferred	Read/Write
4337	Meter #1 Temperature Override	1 Inferred	Read/Write
4339	Meter #2 Temperature Override	1 Inferred	Read/Write
4341	Meter #1 Pressure Override	1 Inferred	Read/Write
4343	Meter #2 Pressure Override	1 Inferred	Read/Write
4345	Meter #1 Base Density Override	6 Inferred	Read/Write
4347	Meter #2 Base Density Override	6 Inferred	Read/Write
4349	Meter #1 DP Cut Off	4 Inferred	Read/Write
4351	Meter #1 Flow Rate Low Limit	2Inferred	Read/Write
4353	Meter #1 Flow Rate High Limit	2Inferred	Read/Write
4355	Meter #1 Pipe ID	5 Inferred	Read/Write
4357	Meter #1 Orifice ID	5 Inferred	Read/Write
4359	Meter #2 DP Cut Off	4 Inferred	Read/Write
4361	Meter #2 Flow Rate Low Limit	2Inferred	Read/Write
4363	Meter #2 Flow Rate High Limit	2Inferred	Read/Write
4365	Meter #2 Pipe ID	5 Inferred	Read/Write
4367	Meter #2 Orifice ID	5 Inferred	Read/Write
4369	Meter #1 Density Dry Air	5 Inferred	Read/Write
4371	Meter #1 Relative Density	6 Inferred	Read/Write
4373	Meter #1 Ratio of Heat	6 Inferred	Read/Write
4375	Meter #1 Viscosity	6 Inferred	Read/Write
4377	Meter #1 Pipe Thermal E-6	2 Inferred	Read/Write
4379	Meter #1 Orifice Thermal E-6	2 Inferred	Read/Write
4381	Meter #1 Reference Temp of Pipe	2 Inferred	Read/Write
4383	Meter #1 Reference Temp of Orifice	2 Inferred	Read/Write
4385	Meter #2 Density Dry Air	5 Inferred	Read/Write
4387	Meter #2 Relative Density	6 Inferred	Read/Write
4389	Meter #2 Ratio of Heat	6 Inferred	Read/Write
4391	Meter #2 Viscosity	6 Inferred	Read/Write
4393	Meter #2 Pipe Thermal E-6	2 Inferred	Read/Write
4395	Meter #2 Orifice Thermal E-6	2 Inferred	Read/Write
4397	Meter #2 Refernece Temp of Pipe	2 Inferred	Read/Write
4399	Meter #2 Reference Temp of Orifice	2 Inferred	Read/Write
4401	Meter #1 DP Switch High %	2 Inferred	Read/Write
4403	Meter #2 DP Switch Low %	2 Inferred	Read/Write
4405	Meter #1 K Factor	3 Inferred	Read/Write
4407	Meter #1 Meter Factor	6 Inferred	Read/Write
4409	Meter #2 K Factor	3 Inferred	Read/Write
4411	Meter #2 Meter Factor	6 Inferred	Read/Write
4413	Meter #1 Flow Threshold #1	2 Inferred	Read/Write
4415	Meter #1 Flow Threshold #2	2 Inferred	Read/Write
4417	Meter #1 Flow Threshold #3	2 Inferred	Read/Write
4419	Meter #1 Flow Threshold #4	2 Inferred	Read/Write
4421	Meter #1 Linear Factor #1	6 Inferred	Read/Write
4423	Meter #1 Linear Factor #2	6 Inferred	Read/Write
4425	Meter #1 Linear Factor #3	6 Inferred	Read/Write
4427	Meter #1 Linear Factor #4	6 Inferred	Read/Write
4429	Meter #2 Flow Threshold #1	2 Inferred	Read/Write
4431	Meter #2 Flow Threshold #2	2 Inferred	Read/Write

Modbus Address Table – 2x16 Bits Integer

ADDRESS	DESCRIPTION	DECIMAL	READ/WRITE
4433	Meter #2 Flow Threshold #3	2 Inferred	Read/Write
4435	Meter #2 Flow Threshold #4	2 Inferred	Read/Write
4437	Meter #2 Linear Factor #1	6 Inferred	Read/Write
4439	Meter #2 Linear Factor #2	6 Inferred	Read/Write
4441	Meter #2 Linear Factor #3	6 Inferred	Read/Write
4443	Meter #2 Linear Factor #4	6 Inferred	Read/Write
4445-4447	Spare		
4449	Meter #1 Annubar - Manometer Factor	6 Inferred	Read/Write
4451	Meter #1 Annubar - Location Factor	6 Inferred	Read/Write
4453	Meter #1 Annubar - Fra Factor	6 Inferred	Read/Write
4455	Meter #1 Annubar - Flow Coefficient K	6 Inferred	Read/Write
4457	Meter #1 Annubar - Thermal Factor	6 Inferred	Read/Write
4459	Meter #2 Annubar - Manometer Factor	6 Inferred	Read/Write
4461	Meter #2 Annubar - Location Factor	6 Inferred	Read/Write
4463	Meter #2 Annubar/Preso - Fra Factor	6 Inferred	Read/Write
4465	Meter #2 Annubar - Flow Coefficient K	6 Inferred	Read/Write
4467	Meter #2 Annubar - Thermal Factor	6 Inferred	Read/Write
4469	Meter #1 Venturi Discharge Coefficient	6 Inferred	Read/Write
4471	Meter #2 Venturi Discharge Coefficient	6 Inferred	Read/Write
4473	Meter #1 Heat Ratio	6 Inferred	Read/Write
4475	Meter #2 Heat Ratio	6 Inferred	Read/Write
4477	Meter #1 Viscosity	6 Inferred	Read/Write
4479	Meter #2 Viscosity	6 Inferred	Read/Write
4481-4515	Spare		
4517	Meter#1 PID Output %	2 Inferred	Read/Write
4519	Meter#1 PID Flow	2 Inferred	Read/Write
4521	Meter#1 PID Flow Set Point	2 Inferred	Read/Write
4523	Meter#1 PID Flow Controller Gain	2 Inferred	Read/Write
4525	Meter#1 PID Flow Controller Reset	2 Inferred	Read/Write
4527	Meter#1 PID Pressure Maximum	2 Inferred	Read/Write
4529	Meter#1 PID Pres.Set Point	2 Inferred	Read/Write
4531	Meter#1 PID Pres.Controller Gain	2 Inferred	Read/Write
4533	Meter#1 PID Pres.Controller Reset	2 Inferred	Read/Write
4535	Meter#1 PID Minimum Output %	2 Inferred	Read/Write
4537	Meter#1 PID Maximum Output %	2 Inferred	Read/Write
4539	Meter#2 PID Output %	2 Inferred	Read/Write
4541	Meter#2 PID Flow Maximum	2 Inferred	Read/Write
4543	Meter#2 PID Flow Set Point	2 Inferred	Read/Write
4545	Meter#2 PID Flow Controller Gain	2 Inferred	Read/Write
4547	Meter#2 PID Flow Controller Reset	2 Inferred	Read/Write
4549	Meter#2 PID Pressure Maximum	2 Inferred	Read/Write
4551	Meter#2 PID Pres.Set Point	2 Inferred	Read/Write
4553	Meter#2 PID Pres.Controller Gain	2 Inferred	Read/Write
4555	Meter#2 PID Pres.Controller Reset	2 Inferred	Read/Write
4557	Meter#2 PID Minimum Output %	2 Inferred	Read/Write
4559	Meter#2 PID Maximum Output %	2 Inferred	Read/Write
4561-4655	Spare		
4657	Meter #1 DP Low @4mA	4 Inferred	Read/Write
4659	Meter #1 DP Low @20mA	4 Inferred	Read/Write
4661	Meter #1 DP Low Limit	4 Inferred	Read/Write

Modbus Address Table – 2x16 Bits Integer

ADDRESS	DESCRIPTION	DECIMAL	READ/WRITE
4663	Meter #1 DP High Limit	4 Inferred	Read/Write
4665	Meter #1 DP Maintenance	4 Inferred	Read/Write
4667	Meter #1 Temperature Deg.F @4mA	1 Inferred	Read/Write
4669	Meter #1 Temperature Deg.F @20mA	1 Inferred	Read/Write
4671	Meter #1 Temperature Deg.F Low Limit	1 Inferred	Read/Write
4673	Meter #1 Temperature Deg.F High Limit	1 Inferred	Read/Write
4675	Meter #1 Temperature Deg.F Maintenance	1 Inferred	Read/Write
4677	Meter #1 Pressure PSIG @4mA	1 Inferred	Read/Write
4679	Meter #1 Pressure PSIG @20mA	1 Inferred	Read/Write
4681	Meter #1 Pressure PSIG Low Limit	1 Inferred	Read/Write
4683	Meter #1 Pressure PSIG High Limit	1 Inferred	Read/Write
4685	Meter #1 Pressure PSIG Maintenance	1 Inferred	Read/Write
4687	Meter #1 Density @4mA	6 Inferred	Read/Write
4689	Meter #1 Density @20mA	6 Inferred	Read/Write
4691	Meter #1 Density Low Limit	6 Inferred	Read/Write
4693	Meter #1 Density High Limit	6 Inferred	Read/Write
4695	Meter #1 Density Maintenance	6 Inferred	Read/Write
4697	Meter #1 Dens.Temp DEG.F @4mA	1 Inferred	Read/Write
4699	Meter #1 Dens.Temp DEG.F @20mA	1 Inferred	Read/Write
4701	Meter #1 Dens.Temp DEG.F Low Limit	1 Inferred	Read/Write
4703	Meter #1 Dens.Temp DEG.F High Limit	1 Inferred	Read/Write
4705	Meter #1 Dens.Temp DEG.F Maintenance	1 Inferred	Read/Write
4707	Meter #1 DP High @4mA	4 Inferred	Read/Write
4709	Meter #1 DP High @20mA	4 Inferred	Read/Write
4711-4715	Spare		
4717	Meter #1 Density Correction Factor	5 Inferred	Read/Write
4719	Meter #1 Dens.Period Low Limit	3 Inferred	Read/Write
4721	Meter #1 Dens.Period High Limit	3 Inferred	Read/Write
4723-4725	Spare		
4727	Meter #2 DP Low @4mA	4 Inferred	Read/Write
4729	Meter #2 DP Low @20mA	4 Inferred	Read/Write
4731	Meter #2 DP Low Limit	4 Inferred	Read/Write
4733	Meter #2 DP High Limit	4 Inferred	Read/Write
4735	Meter #2 DP Maintenance	4 Inferred	Read/Write
4737	Meter #2 Temperature DEG.F @4mA	1 Inferred	Read/Write
4739	Meter #2 Temperature DEG.F @20mA	1 Inferred	Read/Write
4741	Meter #2 Temperature DEG.F Low Limit	1 Inferred	Read/Write
4743	Meter #2 Temperature DEG.F High Limit	1 Inferred	Read/Write
4745	Meter #2 Temperature DEG.F Maintenance	1 Inferred	Read/Write
4747	Meter #2 Pressure PSIG @4mA	1 Inferred	Read/Write
4749	Meter #2 Pressure PSIG @20mA	1 Inferred	Read/Write
4751	Meter #2 Pressure PSIG Low Limit	1 Inferred	Read/Write
4753	Meter #2 Pressure PSIG High Limit	1 Inferred	Read/Write
4755	Meter #2 Pressure PSIG Maintenance	1 Inferred	Read/Write

Modbus Address Table – 2x16 Bits Integer

ADDRESS	DESCRIPTION	DECIMAL	READ/WRITE
4757	Meter #2 Density @4mA	6 Inferred	Read/Write
4759	Meter #2 Density @20mA	6 Inferred	Read/Write
4761	Meter #2 Density Low Limit	6 Inferred	Read/Write
4763	Meter #2 Density High Limit	6 Inferred	Read/Write
4765	Meter #2 Density Maintenance	6 Inferred	Read/Write
4767	Meter #2 Dens.Temp DEG.F @4mA	1 Inferred	Read/Write
4769	Meter #2 Dens.Temp DEG.F @20mA	1 Inferred	Read/Write
4771	Meter #2 Dens.Temp DEG.F Low Limit	1 Inferred	Read/Write
4773	Meter #2 Dens.Temp DEG.F High Limit	1 Inferred	Read/Write
4775	Meter #2 Dens.Temp DEG.F Maintenance	1 Inferred	Read/Write
4777	Meter #2 DP High @4mA	4 Inferred	Read/Write
4779	Meter #2 DP High @20mA	4 Inferred	Read/Write
4781-4785	Spare		
4787	Meter #2 Density Correction Factor	5 Inferred	Read/Write
4789	Meter #2 Dens.Period Low Limit	3 Inferred	Read/Write
4791	Meter #2 Dens.Period High Limit	3 Inferred	Read/Write
4793-4796	Spare		
4797	Spare#1 @4mA	4 Inferred	Read/Write
4799	Spare#1 @20mA	4 Inferred	Read/Write
4801	Spare#1 Lo-Limit	4 Inferred	Read/Write
4803	Spare#1 Hi-Limit	4 Inferred	Read/Write
4805	Spare#1 Maintenance	4 Inferred	Read/Write
4807	Spare#2 @4mA	4 Inferred	Read/Write
4809	Spare#2 @20mA	4 Inferred	Read/Write
4811	Spare#2 Lo-Limit	4 Inferred	Read/Write
4813	Spare#2 Hi-Limit	4 Inferred	Read/Write
4815	Spare#2 Maintenance	4 Inferred	Read/Write
4817	Spare		
4819	Base Temperature DEG.F	3 Inferred	Read/Write
4821	Base Pressure PSIA	3 Inferred	Read/Write
4823	Run Switch Low Set Point	2 Inferred	Read/Write
4825	Run Switch High Set Point	2 Inferred	Read/Write
4827	Atmospheric Pressure PSIA	3 Inferred	Read/Write
4829	Pulse Output Volume #1 Pulses/Unit	3 Inferred	Read/Write
4831	Pulse Output Volume #2 Pulses/Unit	3 Inferred	Read/Write
4833-4839	Spare		
4841	Meter #1 Premium Level #1	1 Inferred	Read/Write
4843	Meter #1 Premium Level #2	1 Inferred	Read/Write
4845	Meter #1 Premium Level #3	1 Inferred	Read/Write
4847	Meter #1 Premium Level #4	1 Inferred	Read/Write
4849	Meter #2 Premium Level #1	1 Inferred	Read/Write
4851	Meter #2 Premium Level #2	1 Inferred	Read/Write
4853	Meter #2 Premium Level #3	1 Inferred	Read/Write
4855	Meter #2 Premium Level #4	1 Inferred	Read/Write
4857	Station Premium Level #1	1 Inferred	Read/Write
4859	Station Premium Level #2	1 Inferred	Read/Write
4861	Station Premium Level #3	1 Inferred	Read/Write
4863	Station Premium Level #4	1 Inferred	Read/Write
4865-4871	Spare		

Modbus Address Table – 2x16 Bits Integer

ADDRESS	DESCRIPTION	DECIMAL	READ/WRITE
4873	Analog Output #1 at 4 mA	*	Read/Write
4875	Analog Output #1 at 20 mA	*	Read/Write
4877	Analog Output #2 at 4 mA	**	Read/Write
4879	Analog Output #2 at 20 mA	**	Read/Write
4881	Analog Output #3 at 4 mA	***	Read/Write
4883	Analog Output #3 at 20 mA	***	Read/Write
4885	Analog Output #4 at 4 mA	****	Read/Write
4887	Analog Output #4 at 20 mA	****	Read/Write

***Analog Output#1 Assignment Modbus Address 2827**

Analog Output#1 Assignment	4873, 4875 Decimal Inferred
14, 15, 17, 22, 23, 25	1
16, 18, 24, 26, 30, 32	6
13, 19, 20, 21, 27, 28, 33, 34	4
1, 2, 3, 4, 5, 6, 7, 8, 9, 10, 11, 12	2
Others	0

****Analog Output#2 Assignment Modbus Address 2828**

Analog Output#2 Assignment	4877, 4879 Decimal Inferred
14, 15, 17, 22, 23, 25	1
16, 18, 24, 26, 30, 32	6
13, 19, 20, 21, 27, 28, 33, 34	4
1, 2, 3, 4, 5, 6, 7, 8, 9, 10, 11, 12	2
Others	0

*****Analog Output#3 Assignment Modbus Address 2829**

Analog Output#3 Assignment	4881, 4883 Decimal Inferred
14, 15, 17, 22, 23, 25	1
16, 18, 24, 26, 30, 32	6
13, 19, 20, 21, 27, 28, 33, 34	4
1, 2, 3, 4, 5, 6, 7, 8, 9, 10, 11, 12	2
Others	0

******Analog Output#4 Assignment Modbus Address 2830**

Analog Output#4 Assignment	4885, 4887 Decimal Inferred
14, 15, 17, 22, 23, 25	1
16, 18, 24, 26, 30, 32	6
13, 19, 20, 21, 27, 28, 33, 34	4
1, 2, 3, 4, 5, 6, 7, 8, 9, 10, 11, 12	2
Others	0

Modbus Address Table – 2x16 Bits Integer

ADDRESS	DESCRIPTION	DECIMAL	READ/WRITE

Last Hourly Data Area

3029 = Last Hourly Report Request (3029, 16 bits Integer, Write only)
Set requested date, set requested hour, and then set last hourly report request to 1 in that order.

8001-8033 (2x16 bits Integers, Read only)

8001	Date (mm/dd/yy)	0 Inferred	Read
8003	Meter1 Hourly Duration of Flow		
	3rd byte - Duration of Flow	2 Inferred	Read
	4th byte - Hour (0-23)	0 Inferred	Read
8005	Meter2 Hourly Duration of Flow		
	3rd byte - Duration of Flow	2 Inferred	Read
	4th byte - Hour (0-23)	0 Inferred	Read
8007	Meter #1 Net MCF	0 Inferred	Read
8009	Meter #2 Net MCF	0 Inferred	Read
8011	Meter #1 Mass MLB	0 Inferred	Read
8013	Meter #2 Mass MLB	0 Inferred	Read
8015	Meter #1 Energy MMBTU	0 Inferred	Read
8017	Meter #2 Energy MMBTU	0 Inferred	Read
8019	Meter #1 FWA Temperature	1 Inferred	Read
8021	Meter #2 FWA Temperature	1 Inferred	Read
8023	Meter #1 FWA DP Inches	4 Inferred	Read
8025	Meter #2 FWA DP Inches	4 Inferred	Read
8027	Meter #1 FWA SG	4 Inferred	Read
8029	Meter #2 FWA SG	4 Inferred	Read
8031	Meter #1 FWA Pressure	1 Inferred	Read
8033	Meter #2 FWA Pressure	1 Inferred	Read

Last Hourly Data Area Ends

Modbus Address Table – 2x16 Bits Integer

ADDRESS	DESCRIPTION	DECIMAL	READ/WRITE

*** Non-resettable accumulated volume will roll over at 99999999.**

Current Data Area

9001	Meter #1 Calculation Type	0 Inferred	Read
9003	Meter #1 Flow Flag	0 Inferred	Read
9005	Meter #1 Alarm Status Flag	0 Inferred	Read
9007	Meter #1 Daily Gross	0 inferred	Read
9009	Meter #1 Daily Net	0 inferred	Read
9011	Meter #1 Daily Mass	0 inferred	Read
9013	Meter #1 Daily Energy	0 inferred	Read
9015	Meter #1 FWA DP	4 Inferred	Read
9017	Meter #1 FWA Temperature	1 Inferred	Read
9019	Meter #1 FWA Pressure	1 Inferred	Read
9021	Meter #1 FWA Density	6 Inferred	Read
9023	Meter #1 FWA Dens.Temp	1 Inferred	Read
9025	Meter #1 FWA Dens.b	6 Inferred	Read
9027	Meter #1 FWA SG	6 Inferred	Read
9029	Meter #1 FWA Y Factor.	6 Inferred	Read
9031	Meter #1 FWA K/CD/LMF	6 Inferred	Read
9033	Meter #1 FWA FPV/FRA	6 Inferred	Read
9035	Meter #1 FWA FA	6 Inferred	Read
9037-9039	Spare		
9041	Meter #1 Gross Flow Rate	2 Inferred	Read
9043	Meter #1 Net Flow Rate	2 Inferred	Read
9045	Meter #1 Mass Flow Rate	2 Inferred	Read
9047	Meter #1 Energy Flow Rate	2 Inferred	Read
9049	Meter #1 DP	4 Inferred	Read
9051	Meter #1 Temperature	1 Inferred	Read
9053	Meter #1 Pressure	1 Inferred	Read
9055	Meter #1 Density	6 Inferred	Read
9057	Meter #1 Dens.Temp	1 Inferred	Read
9059	Meter #1 Dens.b	6 Inferred	Read
9061	Meter #1 SG	6 Inferred	Read
9063	Meter #1 Y Factor	6 Inferred	Read
9065	Meter #1 K /CD/LMF	6 Inferred	Read
9067	Meter #1 FPV/FRA	6 Inferred	Read
9069	Meter #1 FA	6 Inferred	Read
9071-9073	Spare		
9075	Meter#1 Premium – Base	1 Inferred	Read
9077	Meter#1 Premium – P1	1 Inferred	Read
9079	Meter#1 Premium – P2	1 Inferred	Read
9081	Meter#1 Premium – P3	1 Inferred	Read
9083	Meter#1 Premium – P4	1 Inferred	Read
9085	Reserved		
9087	Meter#1 Cum. Premium – Base	1 Inferred	Read
9089	Meter#1 Cum. Premium – P1	1 Inferred	Read
9091	Meter#1 Cum. Premium – P2	1 Inferred	Read
9093	Meter#1 Cum. Premium – P3	1 Inferred	Read
9095	Meter#1 Cum. Premium – P4	1 Inferred	Read
9097	Reserved		
9099-9131	Spare		
9133	Meter#1 Cumulative Gross Total	0 Inferred	Read

Modbus Address Table – 2x16 Bits Integer

ADDRESS	DESCRIPTION	DECIMAL	READ/WRITE
9135	Meter#1 Cumulative Net Total	0 Inferred	Read
9137	Meter#1 Cumulative Mass Total	0 Inferred	Read
9139	Meter#1 Cumulative Energy Total	0 Inferred	Read
9141	Meter #1 Density Calc. Type	0 Inferred	Read
9143-9145	Meter #1 Meter ID	8 Chars.	Read
9147	Meter #1 Pipe ID	5 Inferred	Read
9149	Meter #1 Orifice ID	5 Inferred	Read
9151	Meter #1 Density Correction Factor	5 Inferred	Read
9153	Meter #1 Density of Dry Air	5 Inferred	Read
9155	Meter #1 Heating Value BTU/FT3	3 Inferred	Read
9157	Meter #1 K Factor	3 Inferred	Read
9159	Current Date	0 Inferred	Read
9161	Current Time	0 Inferred	Read
9163-9199	Spare		
9201	Meter #2 Calculation Type	0 Inferred	Read
9203	Meter #2 Flow Flag	0 Inferred	Read
9205	Meter #2 Alarm Status Flag	0 Inferred	Read
9207	Meter #2 Daily Gross	0 inferred	Read
9209	Meter #2 Daily Net	0 inferred	Read
9211	Meter #2 Daily Mass	0 inferred	Read
9213	Meter #2 Daily Energy	0 inferred	Read
9215	Meter #2 FWA DP	4 Inferred	Read
9217	Meter #2 FWA Temperature	1 Inferred	Read
9219	Meter #2 FWA Pressure	1 Inferred	Read
9221	Meter #2 FWA Density	6 Inferred	Read
9223	Meter #2 FWA Dens.Temp	1 Inferred	Read
9225	Meter #2 FWA Dens.b	6 Inferred	Read
9227	Meter #2 FWA SG	6 Inferred	Read
9229	Meter #2 FWA Y Factor.	6 Inferred	Read
9231	Meter #2 FWA K/CD/LMF	6 Inferred	Read
9233	Meter #2 FWA FPV/FRA	6 Inferred.	Read
9235	Meter #2 FWA FA	6 Inferred	Read
9237-9239	Spare		
9241	Meter #2 Gross Flow Rate	2 Inferred	Read
9243	Meter #2 Net Flow Rate	2 Inferred	Read
9245	Meter #2 Mass Flow Rate	2 Inferred	Read
9247	Meter #2 Energy Flow Rate	2 Inferred	Read
9249	Meter #2 DP	4 Inferred	Read
9251	Meter #2 Temperature	1 Inferred	Read
9253	Meter #2 Pressure	1 Inferred	Read
9255	Meter #2 Density	6 Inferred	Read
9257	Meter #2 Dens.Temp	1 Inferred	Read
9259	Meter #2 Dens.b	6 Inferred	Read
9261	Meter #2 SG	6 Inferred	Read
9263	Meter #2 Y Factor	6 Inferred	Read
9265	Meter #2 K/CD/LMF	6 Inferred	Read
9267	Meter #2 FPV/FRA	6 Inferred	Read
9269	Meter #2 FA	6 Inferred	Read
9271-9273	Spare		
9275	Meter #2 Premium - Base	1 Inferred	Read
9277	Meter #2 Premium – P1	1 Inferred	Read
9279	Meter #2 Premium – P2	1 Inferred	Read

Modbus Address Table – 2x16 Bits Integer

ADDRESS	DESCRIPTION	DECIMAL	READ/WRITE
9281	Meter #2 Premium – P3	1 Inferred	Read
9283	Meter #2 Premium – P4	1 Inferred	Read
9285	Reserved		
9287	Meter #2 Cumulative Premium - Base	1 Inferred	Read
9289	Meter #2 Cumulative Premium – P1	1 Inferred	Read
9291	Meter #2 Cumulative Premium – P2	1 Inferred	Read
9293	Meter #2 Cumulative Premium – P3	1 Inferred	Read
9295	Meter #2 Cumulative Premium – P4	1 Inferred	Read
9297	Reserved		
9299-931			
9333	Meter #2 Cumulative Gross	0 Inferred	Read
9335	Meter #2 Cumulative Net	0 Inferred	Read
9337	Meter #2 Cumulative Mass	0 Inferred	Read
9339	Meter #2 Cumulative Energy	0 Inferred	Read
9341	Meter #2 Density Calc. Type	0 Inferred	Read
9343-9345	Meter #2 Meter ID	8 Chars.	Read
9347	Meter #2 Pipe ID	5 Inferred	Read
9349	Meter #2 Orifice ID	5 Inferred	Read
9351	Meter #2 Density Correction Factor	5 Inferred	Read
9353	Meter #2 Density of Dry Air	5 Inferred	Read
9355	Meter #2 Heating Value BTU/FT3	3 Inferred	Read
9357	Meter #2 K Factor	3 Inferred	Read
9359-9399	Spare		
9401-9435			
9435	Station Premium - Base	1 Inferred	Read
9437	Station Premium – P1	1 Inferred	Read
9439	Station Premium – P2	1 Inferred	Read
9441	Station Premium – P3	1 Inferred	Read
9443	Station Premium – P4	1 Inferred	Read
9445	Reserved		
9447	Station Cumulative Premium - Base	1 Inferred	Read
9449	Station Cumulative Premium – P1	1 Inferred	Read
9451	Station Cumulative Premium – P2	1 Inferred	Read
9453	Station Cumulative Premium – P3	1 Inferred	Read
9455	Station Cumulative Premium – P4	1 Inferred	Read

Alarm and Audit Trail Data

Previous Data Alarm Area

Set last alarm status request (3030, 16bits Integer, write only) to 1.

4001-4009 (2x16bits integers, Read only)
4001 last alarm date mmddyy
4003 last alarm time hhmmss
4005 last alarm flag - IDx1000000 + CODE x10000 +ACODEx100 +STATUS
4007 last alarm meter #1 cum mass total (0 decimal inferred)
4009 last alarm meter #2 cum mass total (0 decimal inferred)

Last Alarm Flag

ID	CODE	ACODE	STATUS

ID

0	Analog Input #1	87	Gas Chromatograph
1	Analog Input #2	88	Battery
2	Analog Input #3	20	Multi.Var#1 DP
3	Analog Input #4	21	Multi.Var#1 Pressurer
4	RTD Input	22	Multi.Var#1 Temperature
		23	Multi.Var#2 DP
5	Analog Output #1	24	Multi.Var#2 Pressure
6	Analog Output #2	25	Multi.Var#2 Temperature
7	Analog Output #3		
8	Analog Output #4	11	Meter#1
9,10	Densitometer	12	Meter#2

CODE (Only For ID=Meter#1, ID=Meter#2)

1	Mass Flow Rate (Gross –AGA7)	6	NBS1048 Out of Range
2	NX19 Out of Range	7	Down
3	AGA8 Out of Range	8	Start
4	STEAM Out of Range		
5	ETHYLENE Out of Range		

ACODE

Given in one hexadecimal byte (HEX 00): (in binary bit7, bit6, bit5, bit4, bit3, bit2, bit1, bit0

Bit **6** = :	0	1 meter configuration
	1	2 meters configuration

STATUS

0	ID =10:	FAILED OK	**1**	ID=87 Failed, Other= HI
	ID = 5-8:	OVERRANGE OK	**2**	LO
	ID=Others	OK	**4**	FAILED
Others	Not Used		**5**	OVERRANGE

Example: Last Alarm Flag – (Hex:A8EA33, Decimal:11070003)
ID= 11, CODE=7,ACODE=0,STATUS=3 -> METER #1 DOWN

Previous Alarm Data Area Ends

Previous Audit Data Area

Set last audit data request (3031, 16bits Integer, write only) to 1.

8101-8113 (2x16bits integers, Read only)

8101	Last Audit Date mmddyy
8103	Last Audit Time hhmmss
8105	Old Value (Decimal Inferred in the 4th byte of 8113)
8107	New Vaule(Decimal Inferred in the 4th byte of 8113)
8109	Meter #1 Cum. Mass Total (0 decimal inferred)
8111	Meter #2 Cum. Mass Total (0 decimal inferred)
8113	Code Flag-Given in four hexadecimal bytes (config code, no,audit code,dec)

Code Flag

Config Code	No.	Audit Code	Old/New Value Decimal Inferred

Config Code

in binary – bit7, bit6, bit5, bit4, bit3, bit2, bit1, bit0

bit **6** = :	0	1 meter configuration
	1	2 meters configuration

NO.

The following table is only for audit code is less than 200

Value 0 : this field is not used.

1	Meter #1
2	Meter #2

31	DP Low	*Meter #1*	*Tag ID Assignments*
32	DP High		
33	Temperature		
35	Pressure		
37	Density		
39	Density Temperature		
41	DP Low	*Meter #2*	
42	DP High		
34	Temperature		
36	Pressure		
38	Density		
40	Density Temperature		
43	Spare #1		
44	Spare #2		
45	Analog Output #1		
46	Analog Output #2		
47	Analog Output #3		
48	Analog Output #4		

Examples:

33:Temp.Assignment@ Meter 1

Audit Codes

1	DP Cut Off
2	DP High Switch Percentage
3	
4	
5	Base Density Override
6	Pipe ID
7	Orifice ID
8	Temperature Override

73	Mol % of Argon
142	Flow Rate Threshold #1
143	Flow Rate Threshold #2
144	Flow Rate Threshold #3
145	Flow Rate Threshold #4
146	Linearization Factor #1
147	Linearization Factor #2
148	Linearization Factor #3

9	Pressure Override
10	Density Dry Air
11	Base SG
12	Ratio of Heat
13	Viscosity
14	Pipe Thermal Expansion E-6
15	Orifice Thermal Expansion E-6
16	Reference Temperature of Pipe
17	Reference Temperature of Orifice
18	MOL% of Methane (nx19,aga8d) CO2 (AGA8 Gross Method 1) Nitrogen(AGA8 Gross Method 2)
19	MOL% of Ethane (NX19) Hydrogen (AGA8 Gross Method 1) CO2 (AGA8 Gross Method 2) Nitrogen(AGA8 Detail Method)
20	MOL% of Propane (NX19) CO (AGA8 Gross Method 1) Hydrogen(AGA8 Gross Method 2) CO2 (AGA8 Detail Method)
21	MOL% of Iso-Butane CO (AGA8 Gross Method 2) Ethane (AGA8 Detail Method)
22	MOL% of n-Butane (NX19) Propane (AGA8 Detail Method)
23	MOL% of Iso-Pentane (NX19) Water (AGA8 Detail Method)
24	MOL% of n-Pentane (NX19) H2S (AGA8 Detail Method)
25	MOL% of n-Hexane (NX19) Hydrogen (AGA8 Detail Method)
26	MOL% of n-Heptane (NX19) CO (AGA8 Detail Method)
27	MOL% of n-Octane (NX19) Oxygen (AGA8 Detail Method)
28	MOL% of Carbon Dioxide (NX19) i-Butane (AGA8 Detail Method)
29	MOL% of Nitrogen (NX19) n-Butane (AGA8 Detail Method)
30	DP Low @4mA
31	DP Low @20mA
32	DP Maintenance
33	DP High @4mA
34	DP High @20mA
35	Temperature @4mA
36	Temperature @20mA
37	Temperature Maintenance
38	Pressure @4mA
39	Pressure @20mA
40	Pressure Maintenance
41	Density/Gravity @4mA
42	Density/Gravity @20mA
43	Density/Gravity Maintenance

149	Linearization Factor #4
150	Common Temperature
151	Common Pressure
152	Station Type
153	Flow Rate Display
154	Calculation Type
155	Y Factor Select
156	Tap Select 0=Flange,1=Pipe
157	Use Stack DP 0=No, 1=Yes
158	Densitometer Type
159	Density Unit
160	Use Meter Temp as Dens.Temp
161	Day Start Hour
162	Disable Alarms
163	Flow Coeff. (V-Cone Data) Discharge Coeff. (Venturi Data)
164	Product Type
165	DP Low Assignment
166	Temperature Assignment
167	Pressure Assignment
168	Densitometer Assignment
169	Dens.Temperature Assignment
170	DP High Assignment
171	Spare#1 Assignment
172	Spare#2 Assignment
173	DP Fail Code
174	Temperature Fail Code
175	Pressure Fail Code
176	Densitometer Fail Code
177	Dens. Temp Fail Code
178	Spare#1 Fail Code
179	Spare#2 Fail Code
180	*****SEE NOTE (next page)**
181	Flow Cut Off Hertz
182	K Factor
183	Meter Factor

44	Dens.Temperature @4mA
45	Dens.Temperature @20mA
46	Dens.Temperature Maintenance
50	Spare #1 @4mA
51	Spare #1 @20mA
52	Spare #1 Maintenance
53	Spare #2 @4mA
54	Spare #2 @20mA
55	Spare #2 Maintenance
56	Analog Output Limit @4mA
57	Analog Output Limit@20mA
58	Density Correction Factor
59	
60	Base Temperature
61	Base Pressure
62	Atmospheric Pressure PSIA
63	Pulse Output #1 Volume
64	Pulse Output #2 Volume
65	Mol % of I-Pentane
66	Mol % of n-Pentane
67	Mol % of n-Hexane
68	Mol % of n-Heptane
69	Mol % of n-Octane
70	Mol % of n-Nonane
71	Mol % of n-Decane
72	Mol % of Helium

184	Manometer Factor (FM)
185	Thermal Expansion Factor
186	Location Factor (FL)
187	Reynolds Number Factor(FRA)
188	Annubar Flow Coefficient K
201	Analog Input #1 Calibration
202	Analog Input #2 Calibration
203	Analog Input #3 Calibration
204	Analog Input #4 Calibration
205	RTD Input Calibration
207	Analog Output#1 Calibration
208	Analog Output#2 Calibration
209	Analog Output#3 Calibration
210	Analog Output#4 Calibration
211	Multi.Var#1 DP Calibration
212	Multi.Var#1 Pressure Calibration
213	Multi.Var#1 Temperature Calib.
214	Multi.Var#2 DP Calibration
216	Multi.Var#2 Pressure Calibration
217	Multi.Var#2 Temperature Calib.
87	G.C. Communication Failed
88	G.C. Composition Out of Range

***Example*:**M2 Density Correction Factor change from 1.00000 to 1.10000

8101 **Last Audit Date mmddyy**
00 00 C8 C8 (Hex), 051400 (Decimal) – May 14, 2000

8103 **Last Audit Time hhmmss**
00 03 0d 40 (Hex), 200000(Decimal) – 8 PM

8105 **Old Value (Decimal Inferred in the 4th byte of 8113)**
00 01 86 a0 (Hex) 100000 (Decimal)
4th byte of 8513 = 5 (Decimal Places)
result = 1.00000

8107 **New Vaule(Decimal Inferred in the 4th byte of 8113)**
00 01 ad b0 (Hex) 110000 (Decimal)
4th byte of 8513 = 5 (Decimal Places)
Rsult = 1.10000

8109 **Meter #1 Cumulative Total**
00 00 01 F4 (Hex), 500 (Decimal)
Result = 500 (0 decimal Inferred)

8111 **Meter #2 Cumulative Total**
00 00 01 F4 (Hex), 500 (Decimal)
Result = 500 (0 decimal inferred)

8113 **Code Flag**
00 26 3a 05 in Hex
1st Byte – Config Code in Binary 01000000 – bit 6 is on (2 Meters Configuration)
2nd Byte – NO 26 (Hex) 38 (Decimal) Meter#2 Density,
3rd Byte – Audit Code – 3A(Hex) 58 (Decimal) – Density Correction Factor
4th Byte – Decimal Places – 05(Hex) – 5 Decimal Places

NOTE:

When Audit Code = 180, then the following Modbus Addresses store the parameters indicated.

8101 System Start Date

8103 System Start Time

8105 System Failed Date

8107 System Failed Time

8109 Not Used

8111 Not Used

Previous Audit Data Area Ends

Current Alarm Status

4 Bytes in Hex - FF FF FF FF

METER#1: MODBUS ADDRESS 9497

METER#2: MODBUS ADDRESS 9499

The Current Alarm Status is a 4-byte string that resides at **Modbus address 9497 for Meter #1** and **Modbus address 9499 for Meter #2**. The alarm status codes are the same for both meters.

1st byte	2nd byte	3rd byte	4th byte	
01	00	00	00	Mass Flow Rate High(Gross Flow Rate High if AGA7 is selected)
02	00	00	00	Mass Flow Rate Low (Gross Flow Rate Low if AGA7 is selected)
04	00	00	00	Temperature Assignment High
08	00	00	00	Temperature Assignment Low
10	00	00	00	Pressure Assignment High
20	00	00	00	Pressure Assignment Low
40	00	00	00	Gravity/Density Assignment High
80	00	00	00	Gravity/Density Assignment Low
00	01	00	00	Dens.Temperature Assignment High
00	02	00	00	Dens.Temperature Assignment Low
00	04	00	00	DP Used Assignment High
00	08	00	00	DP Used Assignment Low
00	10	00	00	Densitometer Failed (Dens.Period High)
00	20	00	00	Densitometer Failed (Dens.Period Low)
00	00	00	01	Meter Down
00	00	00	02	NX19 Out of Range
00	00	00	04	AGA8 Out of Range
00	00	00	08	Steam Out of Range
00	00	00	10	Ethylene Out of Range
00	00	00	20	NBS1048 Out of Range

OTHER ALARMS (MODBUS ADDRESS 9495)

4 Bytes in Hex - FF FF FF FF

01	00	00	00	Analog Output #1 Overrange
02	00	00	00	Analog Output #2 Overrange
04	00	00	00	Analog Output #3 Overrange
08	00	00	00	Analog Output #4 Overrange
10	00	00	00	Spare #1 Assignment High
20	00	00	00	Spare #1 Assignment Low
40	00	00	00	Spare #2 Assignment High
80	00	00	00	Spare #2 Assignment Low
00	02	00	00	G.C. Communication Failed
00	04	00	00	G.C. Composition Out of Range

Current Alarms Status Section Ends

INPUT ASSIGNMENTS

1 – Analog Input #1
2 – Analog Input #2
3 – Analog Input #3
4 – Analog Input #4
5 – RTD
10 – Multi.Variable #1
11 – Multi.Variable #2

ADDRESS	DESCRIPTION
2798	Meter #1 DP Assignment
2799	Meter #1 Temperature Assignment
2800	Meter #1 Pressure Assignment
2801	Meter #1 Density Assignment
2802	Meter #1 Dens.Temperature Assignment
2803	Meter #1 DP High Assignment
2804	Meter #2 DP Assignment
2805	Meter #2 Temperature Assignment
2806	Meter #2 Pressure Assignment
2807	Meter #2 Density Assignment
2808	Meter #2 Dens.Temperature Assignment
2809	Meter #2 DP High Assignment
2810	Spare #1 Assignment
2811	Spare #2 Assignment

2841-2844	Analog Input #1 TAG ID	8 Chars.
2845-2848	Analog Input #2 TAG ID	8 Chars.
2849-2852	Analog Input #3 TAG ID	8 Chars.
2853-2856	Analog Input #4 TAG ID	8 Chars.
2857-2860	RTD TAG ID	8 Chars.
2861-2864	Densitometer TAG ID	8 Chars
2865-2868	Analog Output #1 TAG ID	8 Chars
2869-2872	Analog Output #2 TAG ID	8 Chars
2873-2876	Analog Output #3 TAG ID	8 Chars
2877-2880	Analog Output #4 TAG ID	8 Chars

Modbus Address Table – 1x32 Bits

Modbus Address 5051-5900
One Register with 4 Bytes Data
Use function code 03 to read one or multiple 32 bits

ADDRESS	DESCRIPTION	DECIMAL	READ/WRITE
5051	Meter #1 Net Flow Rate	2 Inferred	Read
5052	Meter #1 Mass Flow Rate	2 Inferred	Read
5053	Meter #1 Energy Flow Rate	2 Inferred	Read
5054	Meter #1 DP Low	4 Inferred	Read
5055	Meter #1 DP High	4 Inferred	Read
5056	Meter #1 DP Used	4 Inferred	Read
5057	Meter #1 Pressure	1 Inferred	Read
5058	Meter #1 Temperature	1 Inferred	Read
5059	Meter #1 Pipe ID	4 Inferred	Read
5060	Meter #1 Orifice ID	4 Inferred	Read
5061	Meter #1 Density	6 Inferred	Read
5062	Meter #1 Viscosity	6 Inferred	Read
5063	Meter #1 Reynolds Number	1 Inferred	Read
5064	Meter #1 K/CD/LMF	6 Inferred	Read
5065	Meter #1 Y Factor	6 Inferred	Read
5066	Meter #1 Ratio of Heat	6 Inferred	Read
5067	Meter #1 Heating Value BTU/FT3	3 Inferred	Read
5068	Meter #1 Daily Net Total	0 Inferred	Read
5069	Meter #1 Daily Mass Total	0 Inferred	Read
5070	Meter #1 Daily Energy Total	0 Inferred	Read
5071	Meter #1 Previous Daily Net Total	0 Inferred	Read
5072	Meter #1 Previous Daily Mass Total	0 Inferred	Read
5073	Meter #1 Prev. Daily Energy Total	0 Inferred	Read
5074	Meter #1 Current Month Net Total	0 Inferred	Read
5075	Meter #1 Current Month Mass Total	0 Inferred	Read
5076	Meter #1 Current Month Energy Total	0 Inferred	Read
5077	Meter #1 Previous Month Net Total	0 Inferred	Read
5078	Meter #1 Previous Month Mass Total	0 Inferred	Read
5079	Meter #1 Prev. Month Energy Total	0 Inferred	Read
5080	Meter #1 Cumulative Net Total	0 Inferred	Read
5081	Meter #1 Cumulative Mass Total	0 Inferred	Read
5082	Meter #1 Cumulative Energy Total	0 Inferred	Read
5083	Meter #2 Net Flow Rate	2 Inferred	Read
5084	Meter #2 Mass Flow Rate	2 Inferred	Read
5085	Meter #2 Energy Flow Rate	2 Inferred	Read
5086	Meter #2 DP Low	4 Inferred	Read
5087	Meter #2 DP High	4 Inferred	Read
5088	Meter #2 DP Used	4 Inferred	Read
5089	Meter #2 Pressure	1 Inferred	Read
5090	Meter #2 Temperature	1 Inferred	Read
5091	Meter #2 Pipe ID	4 Inferred	Read

Modbus Address Table – 1x32 Bits

ADDRESS	DESCRIPTION	DECIMAL	READ/WRITE
5092	Meter #2 Orifice ID	4 Inferred	Read
5093	Meter #2 Density	6 Inferred	Read
5094	Meter #2 Viscosity	6 Inferred	Read
5095	Meter #2 Reynolds Number	1 Inferred	Read
5096	Meter #2 K/CD/LMF	6 Inferred	Read
5097	Meter #2 Y Factor	6 Inferred	Read
5098	Meter #2 Ratio of Heat	6 Inferred	Read
5099	Meter #2 Heating Value BTU/FT3	3 Inferred	Read
5100	Meter #2 Daily Net Total	0 Inferred	Read
5101	Meter #2 Daily Mass Total	0 Inferred	Read
5102	Meter #2 Daily Energy Total	0 Inferred	Read
5103	Meter #2 Previous Daily Net Total	0 Inferred	Read
5104	Meter #2 Previous Daily Mass Total	0 Inferred	Read
5105	Meter #2 Previous. Daily Energy Total	0 Inferred	Read
5106	Meter #2 Current Month Net Total	0 Inferred	Read
5107	Meter #2 Current Month Mass Total	0 Inferred	Read
5108	Meter #2 Current Month Energy Total	0 Inferred	Read
5109	Meter #2 Previous Month Net Total	0 Inferred	Read
5110	Meter #2 Previous Month Mass Total	0 Inferred	Read
5111	Meter #2 Previous Month Energy Total	0 Inferred	Read
5112	Meter #2 Cumulative Net Total	0 Inferred	Read
5113	Meter #2 Cumulative Mass Total	0 Inferred	Read
5114	Meter #2 Cumulative Energy Total	0 Inferred	Read
5115	Station Current Day Net Total	0 Inferred	Read
5116	Station Current Day Mass Total	0 Inferred	Read
5117	Station Current Day Energy Total	0 Inferred	Read
5118	Station Previous Day Net Total	0 Inferred	Read
5119	Station Previous Day Mass Total	0 Inferred	Read
5120	Station Previous Day Energy Total	0 Inferred	Read
5121	Station Current Month Net Total	0 Inferred	Read
5122	Station Current Month Mass Total	0 Inferred	Read
5123	Station Current Month Energy Total	0 Inferred	Read
5124	Station Previous Month Net Total	0 Inferred	Read
5125	Station Previous Month Mass Total	0 Inferred	Read
5126	Station Previous Month Energy Total	0 Inferred	Read
5127	Station Cumulative Net Total	0 Inferred	Read
5128	Station Cumulative Mass Total	0 Inferred	Read
5129	Station Cumulative Energy Total	0 Inferred	Read
5130	Station Daily Net Total	0 Inferred	Read
5131	Station Daily Mass Total	0 Inferred	Read
5132	Station Daily Energy Total	0 Inferred	Read
5133	Station Previous Day Net Total	0 Inferred	Read
5134	Station Previous Day Mass Total	0 Inferred	Read
5135	Station Previous Day Energy Total	0 Inferred	Read
5136	Station Current Month Net Total	0 Inferred	Read
5137	Station Current Month Mass Total	0 Inferred	Read
5138	Station Current Month Energy Total	0 Inferred	Read
5139	Station Previous Month Net Total	0 Inferred	Read
5140	Station Previous Month Mass Total	0 Inferred	Read
5141	Station Previous Month Energy Total	0 Inferred	Read
5142	Station Cumulative Net Total	0 Inferred	Read
5143	Station Cumulative Mass Total	0 Inferred	Read
5144	Station Cumulative Energy Total	0 Inferred	Read
5145	Meter #1 Daily Net Total	0 Inferred	Read

Modbus Address Table – 1x32 Bits

ADDRESS	DESCRIPTION	DECIMAL	READ/WRITE
5146	Meter #1 Daily Mass Total	0 Inferred	Read
5147	Meter #1 Daily Energy Total	0 Inferred	Read
5148	Meter #1 Previous Daily Net Total	0 Inferred	Read
5149	Meter #1 Previous Daily Mass Total	0 Inferred	Read
5150	Meter #1 Previous Daily Energy Total	0 Inferred	Read
5151	Meter #1 Current Month Net Total	0 Inferred	Read
5152	Meter #1 Current Month Mass Total	0 Inferred	Read
5153	Meter #1 Current Month Energy Total	0 Inferred	Read
5154	Meter #1 Previous Month Net Total	0 Inferred	Read
5155	Meter #1 Previous Month Mass Total	0 Inferred	Read
5156	Meter #1 Previous Month Energy Total	0 Inferred	Read
5157	Meter #1 Cumulative Net Total	0 Inferred	Read
5158	Meter #1 Cumulative Mass Total	0 Inferred	Read
5159	Meter #1 Cumulative Energy Total	0 Inferred	Read
5160	Meter #2 Daily Net Total	0 Inferred	Read
5161	Meter #2 Daily Mass Total	0 Inferred	Read
5162	Meter #2 Daily Energy Total	0 Inferred	Read
5163	Meter #2 Previous Daily Net Total	0 Inferred	Read
5164	Meter #2 Previous Daily Mass Total	0 Inferred	Read
5165	Meter #2 Previous Daily Energy Total	0 Inferred	Read
5166	Meter #2 Current Month Net Total	0 Inferred	Read
5167	Meter #2 Current Month Mass Total	0 Inferred	Read
5168	Meter #2 Current Month Energy Total	0 Inferred	Read
5169	Meter #2 Previous Month Net Total	0 Inferred	Read
5170	Meter #2 Previous Month Mass Total	0 Inferred	Read
5171	Meter #2 Previous Month Energy Total	0 Inferred	Read
5172	Meter #2 Cumulative Net Total	0 Inferred	Read
5173	Meter #2 Cumulative Mass Total	0 Inferred	Read
5174	Meter #2 Cumulative Energy Total	0 Inferred	Read
5175	Meter #1 Net Flow Rate	2 Inferred	Read
5176	Meter #1 Mass Flow Rate	2 Inferred	Read
5177	Meter #1 Energy Flow Rate	2 Inferred	Read
5178-5180	Spare		
5181	Meter #2 Net Flow Rate	2 Inferred	Read
5182	Meter #2 Mass Flow Rate	2 Inferred	Read
5183	Meter #2 Energy Flow Rate	2 Inferred	Read
5184-5186	Spare		
5187	Station Net Flow Rate	2 Inferred	Read
5188	Station Mass Flow Rate	2 Inferred	Read
5189	Station Energy Flow Rate	2 Inferred	Read
5190	Battery Voltage	1 Inferred	Read
5191-5218	Spare		
5219-5308	Modbus Shift Data Area		
5309-5310	Spare		

Modbus Address Table – 1x32 Bits

ADDRESS	DESCRIPTION	DECIMAL	READ/WRITE

Last Daily or Monthly Data Area

Set Last Daily Report Request (3026) to 1=Latest,35=Oldtest
Daily Data Area in Location 3431-3753

Set Last Monthly Report Request (3027) to 1=Latest,12=Oldtest
Monthly Data Area in Location 3431-3753

5311	Meter #1 Daily/Monthly Gross Total	1 Inferred	Read
5312	Meter #1 Daily/Monthly Net Total	1 Inferred	Read
5313	Meter #1 Daily/Monthly Mass Total	1 Inferred	Read
5314	Meter #1 Daily/Monthly Energy Total	1 Inferred	Read
5315	Meter #2 Daily/Monthly Gross Total	1 Inferred	Read
5316	Meter #2 Daily/Monthly Net Total	1 Inferred	Read
5317	Meter #2 Daily/Monthly Mass Total	1 Inferred	Read
5318	Meter #2 Daily/Monthly Energy Total	1 Inferred	Read
5319	Station Daily/Monthly Gross Total	1 Inferred	Read
5320	Station Daily/Monthly Net Total	1 Inferred	Read
5321	Station Daily/Monthly Mass Total	1 Inferred	Read
5322	Station Daily/Monthly Energy Total	1 Inferred	Read
5323	Meter #1 Daily/Monthly Premium Total - Base	1 Inferred	Read
5324	Meter #1 Daily/Monthly Premium Total – P1	1 Inferred	Read
5325	Meter #1 Daily/Monthly Premium Total – P2	1 Inferred	Read
5326	Meter #1 Daily/Monthly Premium Total – P3	1 Inferred	Read
5327	Meter #1 Daily/Monthly Premium Total – P4	1 Inferred	Read
5328	Reserved		
5329	Meter #2 Daily/Monthly Premium Total - Base	1 Inferred	Read
5330	Meter #2 Daily/Monthly Premium Total – P1	1 Inferred	Read
5331	Meter #2 Daily/Monthly Premium Total – P2	1 Inferred	Read
5332	Meter #2 Daily/Monthly Premium Total – P3	1 Inferred	Read
5333	Meter #2 Daily/Monthly Premium Total – P4	1 Inferred	Read
5334	Reserved		
5335	Station Cum. Premium Total - Base	1 Inferred	Read
5336	Station Cum. Premium Total – P1	1 Inferred	Read
5337	Station Cum. Premium Total – P2	1 Inferred	Read
5338	Station Cum. Premium Total – P3	1 Inferred	Read
5339	Station Cum. Premium Total – P4	1 Inferred	Read
5340	Reserved		
5341	Meter #1 Cum. Premium Total - Base	1 Inferred	Read
5342	Meter #1 Cum. Premium Total – P1	1 Inferred	Read
5343	Meter #1 Cum. Premium Total – P2	1 Inferred	Read
5344	Meter #1 Cum. Premium Total – P3	1 Inferred	Read
5345	Meter #1 Cum. Premium Total – P4	1 Inferred	Read
5346	Reserved		

Modbus Address Table – 1x32 Bits

ADDRESS	DESCRIPTION	DECIMAL	READ/WRITE
5347	Meter #2 Cum. Premium Total - Base	1 Inferred	Read
5348	Meter #2 Cum. Premium Total – P1	1 Inferred	Read
5349	Meter #2 Cum. Premium Total – P2	1 Inferred	Read
5350	Meter #2 Cum. Premium Total – P3	1 Inferred	Read
5351	Meter #2 Cum. Premium Total – P4	1 Inferred	Read
5352	Reserved		
5353	Station Cum. Premium Total - Base	1 Inferred	Read
5354	Station Cum. Premium Total – P1	1 Inferred	Read
5355	Station Cum. Premium Total – P2	1 Inferred	Read
5356	Station Cum. Premium Total – P3	1 Inferred	Read
5357	Station Cum. Premium Total – P4	1 Inferred	Read
5358	Reserved		
5359-5370	Spare		

Last Daily or Monthly Data Area Ends

Modbus Address Table – 1x32 Bits

ADDRESS	DESCRIPTION	DECIMAL	READ/WRITE
5371	Meter#1 Yesterday's Gross Total	0 Inferred	Read
5372	Meter#1 Yesterday's Net Total	0 Inferred	Read
5373	Meter#1 Yesterday's Mass Total	0 Inferred	Read
5374	Meter#1 Yesterday's Energy Total	0 Inferred	Read
5375	Meter#2 Yesterday's Gross Total	0 Inferred	Read
5376	Meter#2 Yesterday's Net Total	0 Inferred	Read
5377	Meter#2 Yesterday's Mass Total	0 Inferred	Read
5378	Meter#2 Yesterday's Energy Total	0 Inferred	Read
5379	Station Yesterday's Gross Total	0 Inferred	Read
5380	Station Yesterday's Net Total	0 Inferred	Read
5381	Station Yesterday's Mass Total	0 Inferred	Read
5382	Station Yesterday's Energy Total	0 Inferred	Read
5383	Meter #1 Yesterday's Premium Total - Base	1 Inferred	Read
5384	Meter #1 Yesterday's Premium Total – P1	1 Inferred	Read
5385	Meter #1 Yesterday's Premium Total – P2	1 Inferred	Read
5386	Meter #1 Yesterday's Premium Total – P3	1 Inferred	Read
5387	Meter #1 Yesterday's Premium Total – P4	1 Inferred	Read
5388	Reserved		
5389	Meter #2 Yesterday's Premium Total - Base	1 Inferred	Read
5390	Meter #2 Yesterday's Premium Total – P1	1 Inferred	Read
5391	Meter #2 Yesterday's Premium Total – P2	1 Inferred	Read
5392	Meter #2 Yesterday's Premium Total – P3	1 Inferred	Read
5393	Meter #2 Yesterday's Premium Total – P4	1 Inferred	Read
5394	Reserved		
5395	Station Yesterday's Premium Total - Base	1 Inferred	Read
5396	Station Yesterday's Premium Total – P1	1 Inferred	Read
5397	Station Yesterday's Premium Total – P2	1 Inferred	Read
5398	Station Yesterday's Premium Total – P3	1 Inferred	Read
5399	Station Yesterday's Premium Total – P4	1 Inferred	Read
5400	Reserved		
5401	Meter #1 Premium Total - Base	1 Inferred	Read
5402	Meter #1 Premium Total – P1	1 Inferred	Read
5403	Meter #1 Premium Total – P2	1 Inferred	Read
5404	Meter #1 Premium Total – P3	1 Inferred	Read
5405	Meter #1 Premium Total – P4	1 Inferred	Read
5406	Reserved		
5407	Meter #2 Premium Total - Base	1 Inferred	Read
5408	Meter #2 Premium Total – P1	1 Inferred	Read
5409	Meter #2 Premium Total – P2	1 Inferred	Read
5410	Meter #2 Premium Total – P3	1 Inferred	Read
5411	Meter #2 Premium Total – P4	1 Inferred	Read
5412	Reserved		
5413	Station Premium Total - Base	1 Inferred	Read
5414	Station Premium Total – P1	1 Inferred	Read
5415	Station Premium Total – P2	1 Inferred	Read
5416	Station Premium Total – P3	1 Inferred	Read
5417	Station Premium Total – P4	1 Inferred	Read
5418	Reserved		

Modbus Address Table – 1x32 Bits

ADDRESS	DESCRIPTION	DECIMAL	READ/WRITE
5419	Meter #1 Cumulative Premium Total - Base	1 Inferred	Read
5420	Meter #1 Cumulative Premium Total – P1	1 Inferred	Read
5421	Meter #1 Cumulative Premium Total – P2	1 Inferred	Read
5422	Meter #1 Cumulative Premium Total – P3	1 Inferred	Read
5423	Meter #1 Cumulative Premium Total – P4	1 Inferred	Read
5424	Reserved		
5425	Meter #2 Cumulative Premium Total - Base	1 Inferred	Read
5426	Meter #2 Cumulative Premium Total – P1	1 Inferred	Read
5427	Meter #2 Cumulative Premium Total – P2	1 Inferred	Read
5428	Meter #2 Cumulative Premium Total – P3	1 Inferred	Read
5429	Meter #2 Cumulative Premium Total – P4	1 Inferred	Read
5430	Reserved		
5431	Station Cumulative Premium Total - Base	1 Inferred	Read
5432	Station Cumulative Premium Total – P1	1 Inferred	Read
5433	Station Cumulative Premium Total – P2	1 Inferred	Read
5434	Station Cumulative Premium Total – P3	1 Inferred	Read
5435	Station Cumulative Premium Total – P4	1 Inferred	Read
5436	Reserved		

Modbus Address Table – 1x32 Bits

ADDRESS	DESCRIPTION	DECIMAL	READ/WRITE
5801	Time (HHMMSS)	0 Inferred	Read/Write
5802	Date (MMDDYY)	0 Inferred	Read/Write
5803	Request Start Date	0 Inferred	Read/Write
5804	Meter #2 DP Low Maintenance Value	4 Inferred	Read/Write
5805	Meter #2 Temperature Maintenance Value	1 Inferred	Read/Write
5806	Meter #2 Pressure Maintenance Value	1 Inferred	Read/Write
5807	Meter #1 Premium Level #1	1 Inferred	Read/Write
5808	Meter #1 Premium Level #2	1 Inferred	Read/Write
5809	Meter #1 Premium Level #3	1 Inferred	Read/Write
5810	Meter #1 Premium Level #4	1 Inferred	Read/Write
5811	Meter #2 Premium Level #1	1 Inferred	Read/Write
5812	Meter #2 Premium Level #2	1 Inferred	Read/Write
5813	Meter #2 Premium Level #3	1 Inferred	Read/Write
5814	Meter #2 Premium Level #4	1 Inferred	Read/Write
5815	Station Premium Level #1	1 Inferred	Read/Write
5816	Station Premium Level #2	1 Inferred	Read/Write
5817	Station Premium Level #3	1 Inferred	Read/Write
5818	Station Premium Level #4	1 Inferred	Read/Write
5819	Meter #1 Flowing Density Override	6 Inferred	Read/Write
5820	Meter #2 Flowing Density Override	6 Inferred	Read/Write
5821-5890	Spare		

Float Point Variables

Hourly Report – 7776–7780,(Read/Write) 5 variables will be reset at the end of hour.
Daily Report – 7781–7785,(Read/Write) 5 variables will be reset at the end of day.
Monthly Report – 7786–7790,(Read/Write) 5 variables will be reset at the end of batch.
Display Variable – 7791–7798(Read/Write). 7791-7795 will be stored in the 'snap shot' report
Scratch Pad for Floating Point Variables – 7801-7830

7071-7075 – Last Hour Program Variables (Read Only)
7076-7080 – Last Day Program Variables (Read Only)
7081-7085 – Last Month Program Variables (Read Only)

CHAPTER 6: Installation Drawings

Explosion-Proof Installation Drawings

REVISIONS				
REV	DESCRIPTION	CHG. NO.	APP'D	DATE
AA				

12. INSTALLATION TO BE IN ACCORDANCE WITH NATIONAL ELECTRICAL CODE.

9. NON-INCENDIVE FIELD WIRING METHODS MAY BE USED FOR CONNECTING THE TEMPERATURE SENSING ASSEMBLY. WHEN USING NON-INCENDIVE FIELD WIRING, THE CONNECTION HEAD AND TEMPERATURE SENSOR ASSEMBLY NEED NOT BE EXPLOSION PROOF, BUT ALL COMPONENTS CONNECTED TO THE TEMP SENSOR CONNECTOR MUST BE CLASSIFIED "SIMPLE APPARATUS". SIMPLE APPARATUS ARE DEVICES WHICH ARE INCAPABLE OF GENERATING OR STORING MORE THAN 1.2V, 0.1A, 25MW, OR 20uJ (RTD'S QUALIFY AS SIMPLE APPARATUS).

8. DIVISION 2 WIRING METHOD.

6. CLASS II INSTALLATIONS MUST USE A CSA APPROVED DUST-INGITIONPROOF SENSOR.

5. IN AMBIENTS GREATER THAN 40°C, SPRING LOADED TEMPERATURE SENSORS USED WITHOUT AN EXPLOSION PROOF THERMOWELL MUST BE RATED FOR AT LEAST 85°C.

4. COMPONENTS REQUIRED TO BE APPROVED MUST BE FOR GAS GROUP APPROPIATE TO AREA CLASSIFICATION.

3. ALL CONDUITS THREADS TO BE ASSEMBLED WITH FIVE FULL THREADS MINIMUM.

2. TRANSMITTER MUST NOT BE CONNECTED TO EQUIPMENT GENERATING MORE THAN 250VAC.

1. WIRING METHOD SUITABLE FOR CLASS I, DIV 1, ANY LENGTH.

UNLESS OTHERWISE SPECIFIED DIMENSIONS IN INCHES [mm]. REMOVE ALL BURRS AND SHARP EDGES. MACHINE SURFACE FINISH 125	CONTRACT NO.	DYNAMIC FLUID MEASUREMENT, INC.	12603 SOUTHWEST FWY, SUITE 320 STAFFORD, TX 77477
	DR. C. SIADO	TITLE MODEL MICROMV AND ECHART EXPLOSIONPROOF INSTALLATION DRAWING, FACTORY MUTUAL	
-TOLERANCE- .X = .1 [2.5] .XX = .02 [0.5] .XXX = .010[0.25] FRACTIONS = 1/32 ANGLES = 2°	CHK'D		
	APP'D. S. HALILAH		
		SIZE A / FSCM NO / DWG NO. CONN-DRW-12	
DO NOT SCALE PRINT	APP'D. GOVT.	SCALE / WT. ——— / SHEET 1 OF 3	

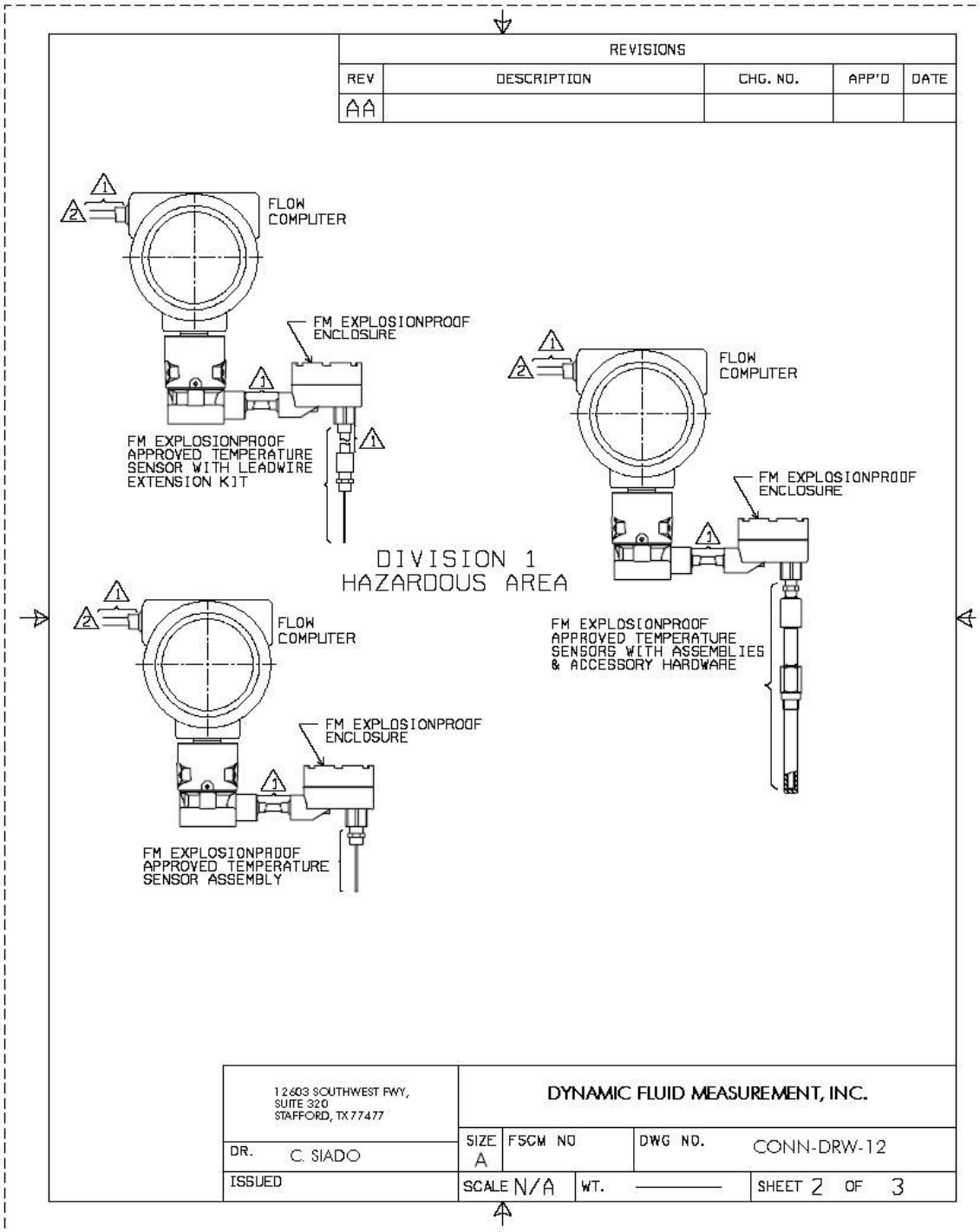
REVISIONS
REV
DESCRIPTION
CHG. NO.
APP'D
DATE
AA
FLOW COMPUTER
FM EXPLOSIONPROOF ENCLOSURE
FM EXPLOSIONPROOF APPROVED TEMPERATURE SENSOR WITH LEADWIRE EXTENSION KIT
FLOW COMPUTER
FM EXPLOSIONPROOF ENCLOSURE
FM EXPLOSIONPROOF APPROVED TEMPERATURE SENSORS WITH ASSEMBLIES & ACCESSORY HARDWARE
DIVISION 1
HAZARDOUS AREA
FLOW COMPUTER
FM EXPLOSIONPROOF ENCLOSURE
FM EXPLOSIONPROOF APPROVED TEMPERATURE SENSOR ASSEMBLY
12603 SOUTHWEST FWY, SUITE 320 STAFFORD, TX 77477
DYNAMIC FLUID MEASUREMENT, INC.
DR. C. SIADO
SIZE A
FSCM NO
DWG NO. CONN-DRW-12
ISSUED
SCALE N/A
WT.
SHEET 2 OF 3

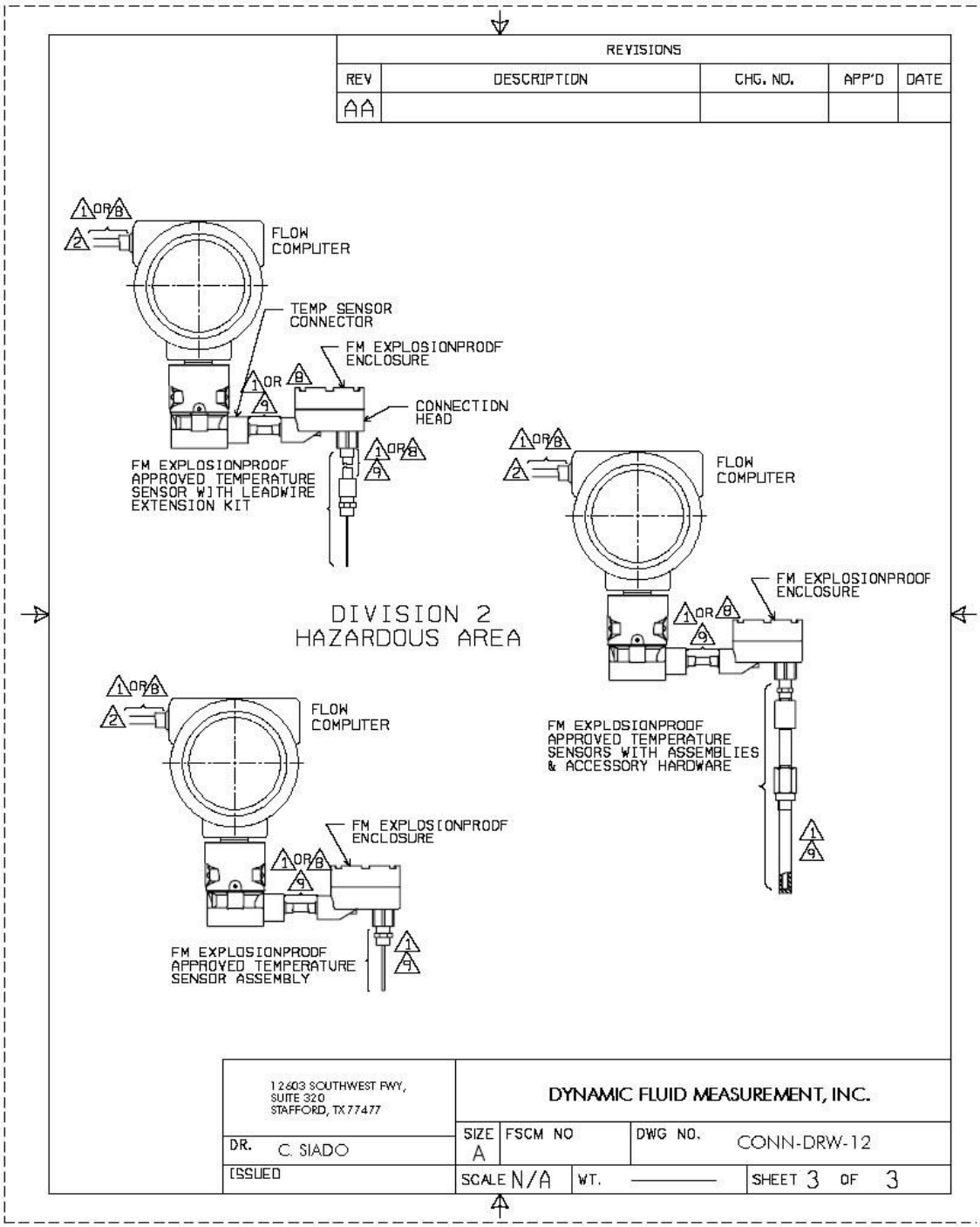
REVISIONS
REV
DESCRIPTION
CHG. NO.
APP'D
DATE
AA
FLOW COMPUTER
TEMP SENSOR CONNECTOR
FM EXPLOSIONPRODF ENCLOSURE
CONNECTION HEAD
FM EXPLOSIONPRODF APPROVED TEMPERATURE SENSOR WITH LEADWIRE EXTENSION KIT
FLOW COMPUTER
FM EXPLOSIONPROOF ENCLOSURE
DIVISION 2
HAZARDOUS AREA
FM EXPLOSIONPROOF APPROVED TEMPERATURE SENSORS WITH ASSEMBLIES & ACCESSORY HARDWARE
FLOW COMPUTER
FM EXPLOSIONPRODF ENCLOSURE
FM EXPLOSIONPRODF APPROVED TEMPERATURE SENSOR ASSEMBLY
12603 SOUTHWEST FWY, SUITE 320 STAFFORD, TX 77477
DYNAMIC FLUID MEASUREMENT, INC.
DR. C. SIADO
SIZE A
FSCM NO
DWG NO. CONN-DRW-12
ISSUED
SCALE N/A
WT.
SHEET 3 OF 3

Manifold Installation Drawings

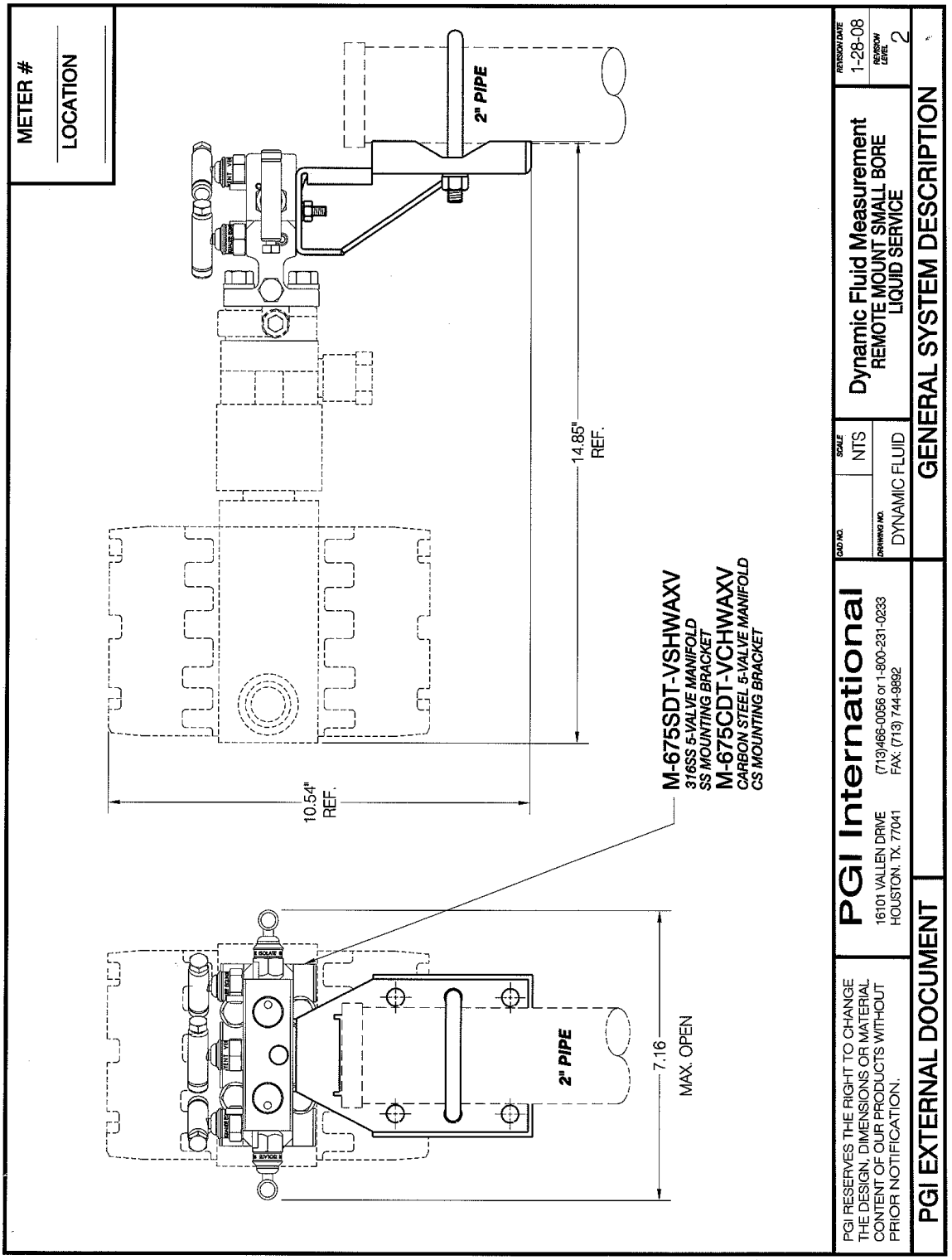

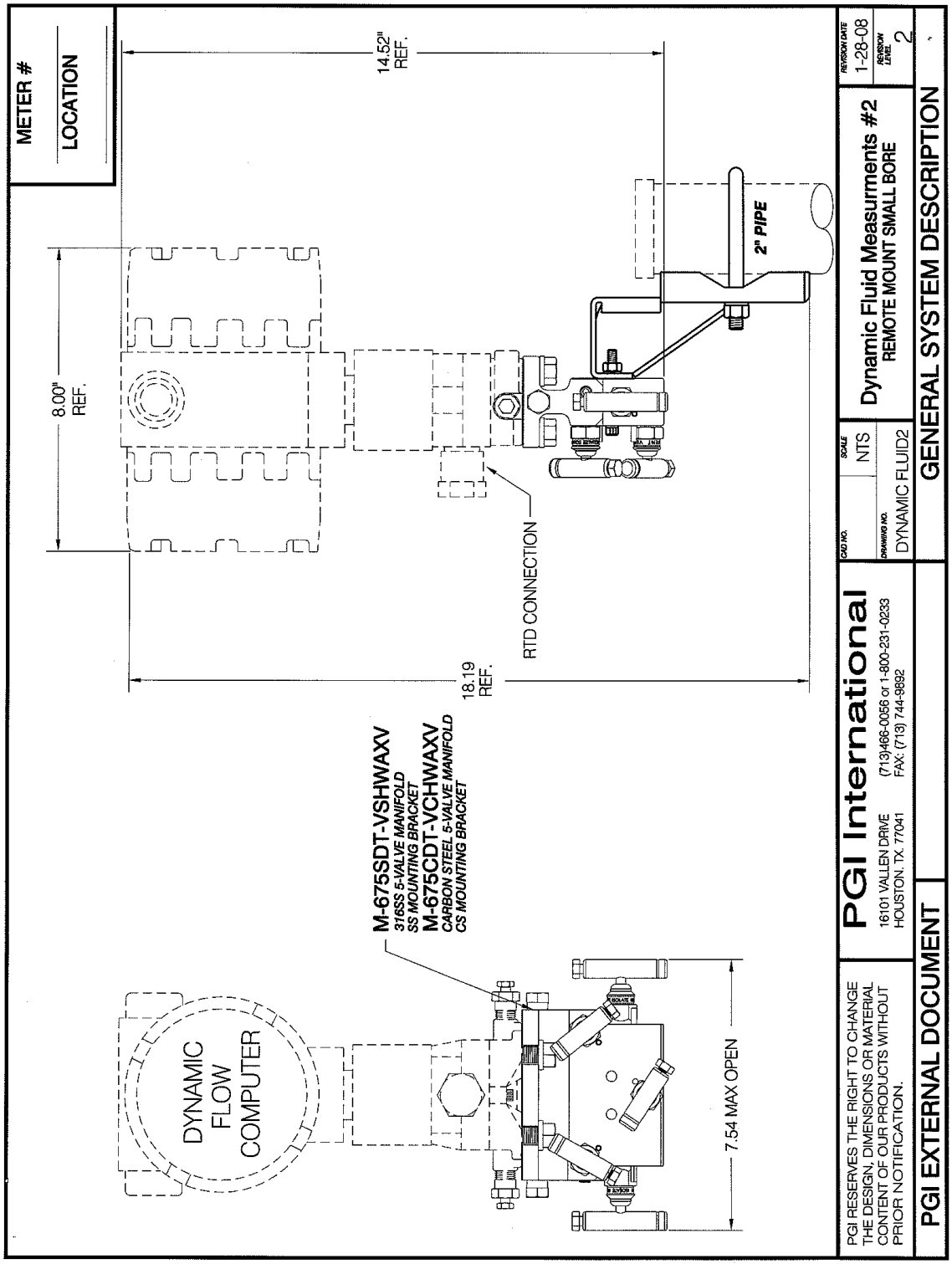
METER #
LOCATION
14.52" REF.
8.00" REF.
2" PIPE
RTD CONNECTION
18.19 REF.
M-675SDT-VSHWAXV
316SS 5-VALVE MANIFOLD
SS MOUNTING BRACKET
M-675CDT-VCHWAXV
CARBON STEEL 5-VALVE MANIFOLD
CS MOUNTING BRACKET
DYNAMIC FLOW COMPUTER
7.54 MAX OPEN
PGI RESERVES THE RIGHT TO CHANGE THE DESIGN, DIMENSIONS OR MATERIAL CONTENT OF OUR PRODUCTS WITHOUT PRIOR NOTIFICATION.
PGI International
16101 VALLEN DRIVE
HOUSTON, TX. 77041
(713)466-0056 or 1-800-231-0233
FAX: (713) 744-9892
CAD NO.
SCALE
NTS
DRAWING NO.
DYNAMIC FLUID2
Dynamic Fluid Measurments #2
REMOTE MOUNT SMALL BORE
REVISION DATE
1-28-08
REVISION LEVEL
2
GENERAL SYSTEM DESCRIPTION
PGI EXTERNAL DOCUMENT

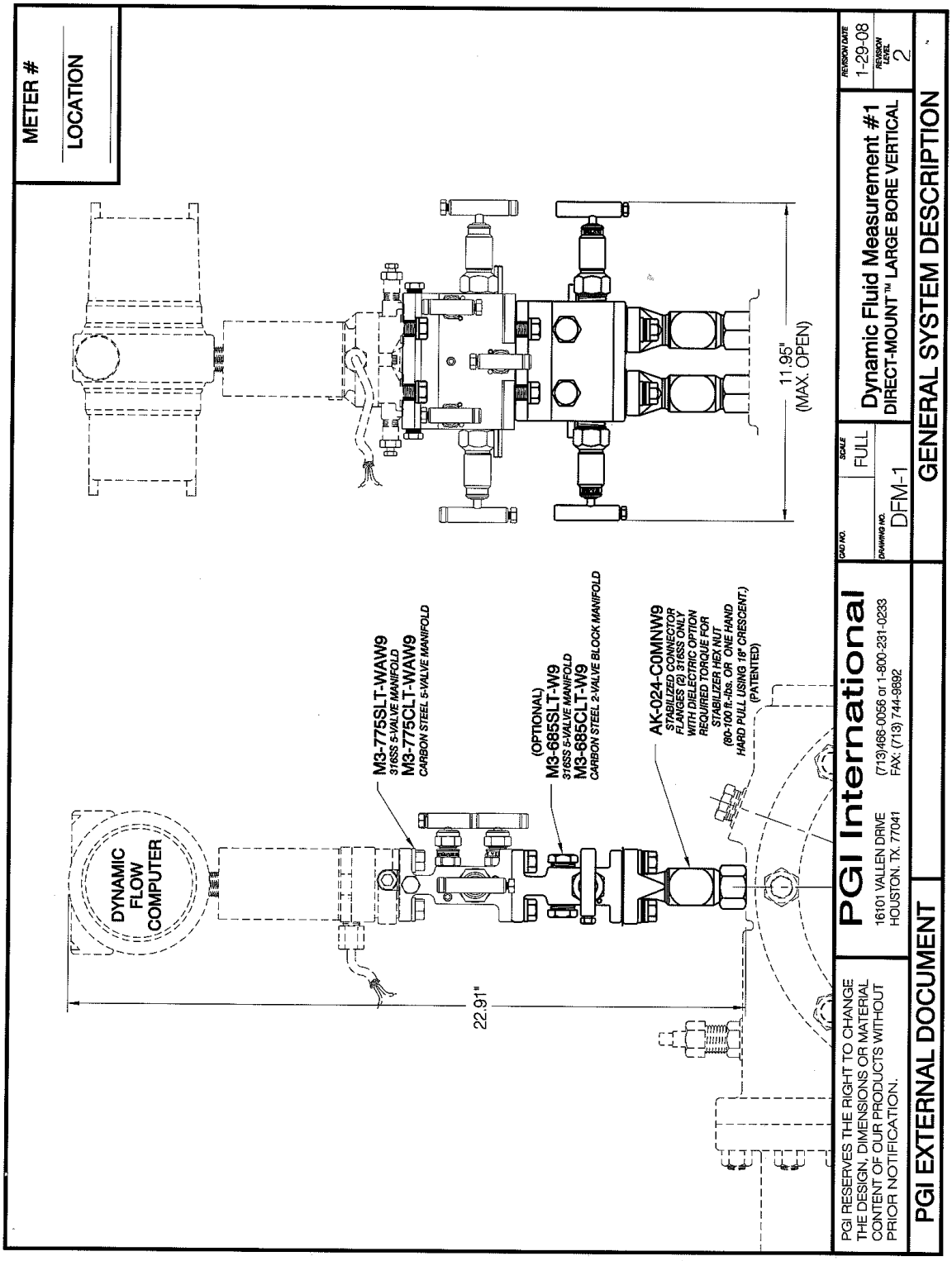
METER #
LOCATION
DYNAMIC FLOW COMPUTER
M3-775SLT-WAW9
316SS 5-VALVE MANIFOLD
M3-775CLT-WAW9
CARBON STEEL 5-VALVE MANIFOLD
(OPTIONAL)
M3-685SLT-W9
316SS 5-VALVE MANIFOLD
M3-685CLT-W9
CARBON STEEL 2-VALVE BLOCK MANIFOLD
AK-024-COMNW9
STABILIZED CONNECTOR
FLANGES (2) 316SS ONLY
WITH DIELECTRIC OPTION
REQUIRED TORQUE FOR
STABILIZER HEX NUT
(80-100 ft.-lbs. OR ONE HAND
HARD PULL USING 18" CRESCENT.)
(PATENTED)
22.91"
11.95"
(MAX. OPEN)
PGI RESERVES THE RIGHT TO CHANGE THE DESIGN, DIMENSIONS OR MATERIAL CONTENT OF OUR PRODUCTS WITHOUT PRIOR NOTIFICATION.
PGI EXTERNAL DOCUMENT
PGI International
16101 VALLEN DRIVE
HOUSTON, TX. 77041
(713)466-0056 or 1-800-231-0233
FAX: (713) 744-9892
CAD NO.
DRAWING NO.
DFM-1
SCALE
FULL
Dynamic Fluid Measurement #1
DIRECT-MOUNT™ LARGE BORE VERTICAL
REVISION DATE
1-29-08
REVISION LEVEL
2
GENERAL SYSTEM DESCRIPTION

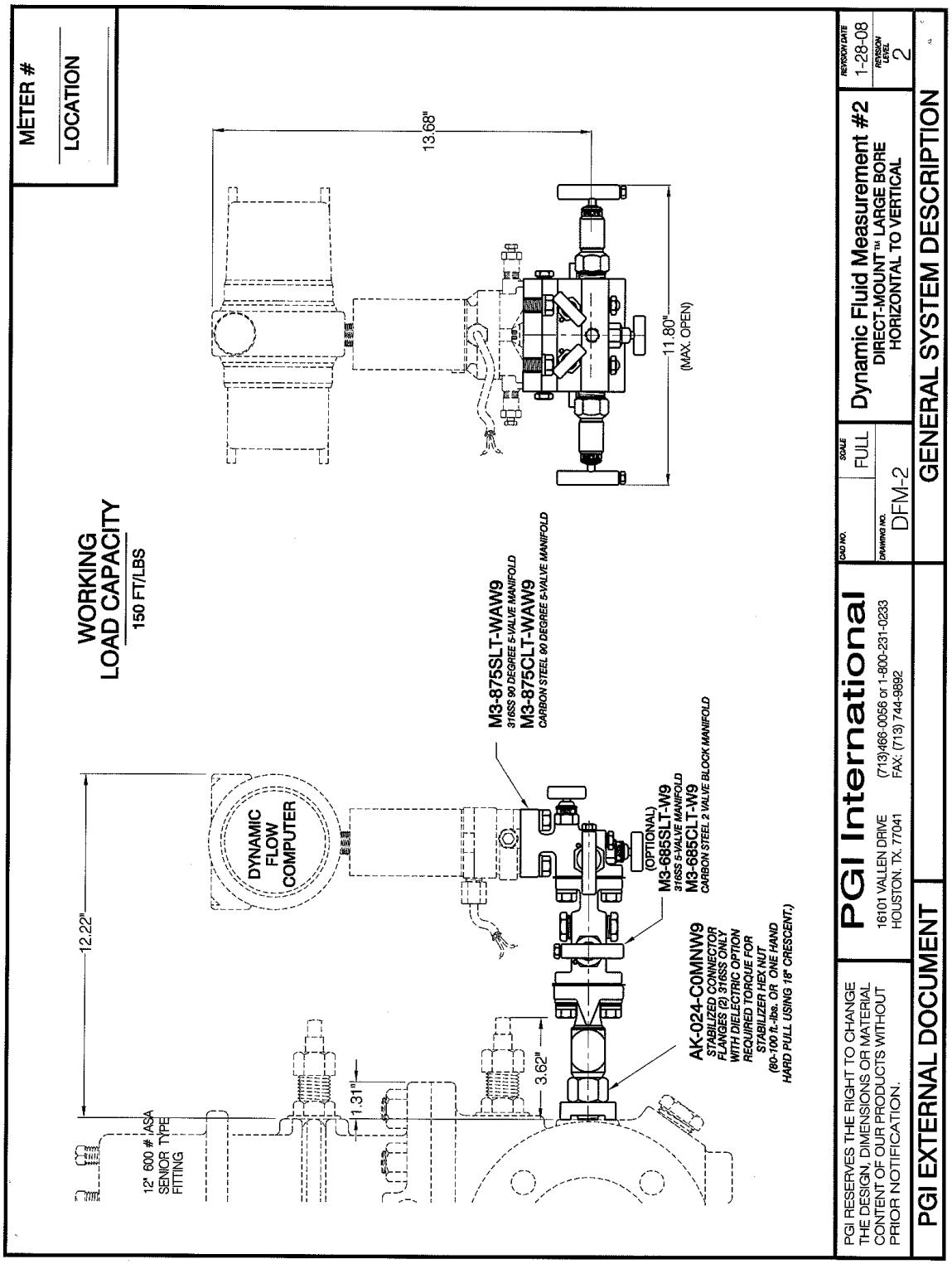
METER #
LOCATION
WORKING LOAD CAPACITY
150 FT/LBS
13.68"
11.80"
(MAX. OPEN)
M3-875SLT-WAW9
316SS 90 DEGREE 5-VALVE MANIFOLD
M3-875CLT-WAW9
CARBON STEEL 90 DEGREE 5-VALVE MANIFOLD
DYNAMIC FLOW COMPUTER
12.22"
(OPTIONAL)
M3-685SLT-W9
316SS 5-VALVE MANIFOLD
M3-685CLT-W9
CARBON STEEL 2 VALVE BLOCK MANIFOLD
AK-024-COMNW9
STABILIZED CONNECTOR FLANGES (2) 316SS ONLY WITH DIELECTRIC OPTION REQUIRED TORQUE FOR STABILIZER HEX NUT (90-100 ft.-lbs. OR ONE HAND HARD PULL USING 18" CRESCENT.)
1.31"
3.62"
12" 600 # ASA SENSOR TYPE FITTING
PGI RESERVES THE RIGHT TO CHANGE THE DESIGN, DIMENSIONS OR MATERIAL CONTENT OF OUR PRODUCTS WITHOUT PRIOR NOTIFICATION.
PGI International
16101 VALLEN DRIVE
HOUSTON, TX. 77041
(713)466-0056 or 1-800-231-0233
FAX: (713) 744-9892
CAD NO.
SCALE
FULL
DRAWING NO.
DFM-2
Dynamic Fluid Measurement #2
DIRECT-MOUNT™ LARGE BORE
HORIZONTAL TO VERTICAL
REVISION DATE
1-28-08
REVISION LEVEL
2
PGI EXTERNAL DOCUMENT
GENERAL SYSTEM DESCRIPTION