MicroMVL/Micro100 Liquid
OPERATORS MANUAL

Flow Computer
Liquid Version

11104 W Airport Blvd, Suite 108
Stafford, Texas 77477 USA
(281) 565-1118
Fax (281) 565-1119

Date: 12/17/2021

WARRANTY

Dynamic Flow Computers warrants to the owner of the Smart Flow Computer that the product delivered will be free from defects in material and workmanship for one (1) year following the date of purchase.
This warranty does not cover the product if it is damaged in the process of being installed or damaged by abuse, accident, misuse, neglect, alteration, repair, disaster, or improper testing.
If the product is found otherwise defective, Dynamic Flow Computers will replace or repair the product at no charge, provided that you deliver the product along with a return material authorization (RMA) number from Dynamic Flow Computers.
Dynamic Flow Computers will not assume any shipping charge or be responsible for product damage due to improper shipping.

THE ABOVE WARRANTY IS IN LIEU OF ANY OTHER WARRANTY EXPRESS IMPLIED OR STATUTORY. BUT NOT LIMITED TO ANY WARRANTY OF MERCHANTABILITY, FITNESS FOR PARTICULAR PURPOSE, OR ANY WARRANTY ARISING OUT OF ANY PROPOSAL, SPECIFICATION, OR SAMPLE.
LIMITATION OF LIABILITY:
DYNAMIC FLOW COMPUTERS SHALL HAVE NO LIABILITY FOR ANY INDIRECT OR SPECULATIVE DAMAGES (INCLUDING, WITHOUT LIMITING THE FOREGOING, CONSEQUENTIAL, INCIDENTAL AND SPECIAL DAMAGES) ARISING FROM THE USE OF, OR INABILITY TO USE THIS PRODUCT. WHETHER ARISING OUT OF CONTRACT, OR UNDER ANY WARRANTY, IRRESPECTIVE OF WHETHER DFM HAS ADVANCED NOTICE OF THE POSSIBILITY OF ANY SUCH DAMAGE INCLUDING, BUT NOT LIMITED TO LOSS OF USE, BUSINESS INTERRUPTION, AND LOSS OF PROFITS. NOTWITHSTANDING THE FOREGOING, DFM'S TOTAL LIABILITY FOR ALL CLAIMS UNDER THIS AGREEMENT SHALL NOT EXCEED THE PRICE PAID FOR THE PRODUCT. THESE LIMITATIONS ON POTENTIAL LIABILITY WERE AN ESSENTIAL ELEMENT IN SETTING THE PRODUCT PRICE. DFM NEITHER ASSUMES NOR AUTHORIZES ANYONE TO ASSUME FOR IT ANY OTHER LIABILITIES

Date: 12/17/2021

CHAPTER 1: QUICK START 1-1
Introduction: 1-1
Quick Start Up 1-2
Technical Data 1-8
Parts List 1-9
Micro MV Flow Computer: Dimensions 1-10
Window Software Minimum Requirements: 1-11
System Minimum Requirements 1-11
What is a configuration file? 1-12
Downloading a configuration file to the flow computer. 1-12
What is an Image File? 1-13
How to download an Image File 1-13
How to force a board into download mode 1-14
Website - DFC Configuration Software 1-15
Website – Image File (Firmware) 1-17
Getting acquainted with the flow computer wiring: 1-18
Back Terminal Wiring: 1-18
INPUT/OUTPUT: Assigning and Ranging Inputs 1-20
Input/Output Assignment 1-20
How to assign a transmitter to an I/O point 1-20
Ranging the Transmitter Inputs: 1-21
WIRING: 1-22
Wiring of Analog Inputs: Version 2 Board 1-22
Wiring of Analog Inputs: Version 1 Board 1-23
Wiring of RTD Input 1-24
Rosemount RTD Connection 1-25
Wiring of Analog Output: 1-26
Additional Analog Inputs or Analog Outputs – Board Installation 1-27
Back Panel - Additional Analog Intputs 1-29
Turbine Input Wiring 1-30
Turbine Input Wiring 1-31
RS-232 Connection: 1-32
PRINTER Connection: 1-33
RS-485 Connection 1-34
Wiring of Status Inputs: 1-35
Wiring of Switch/Pulse Outputs: 1-36
Switch Output to Relay Wiring Diagram: 1-37
Density Input Wiring: 1-38
CALIBRATION 1-39
Analog Input of 4-20mA or 1-5 volt Signal 1-39
RTD Calibration: 1-40
Calibration of Analog Output: 1-41
Multi-Variable Transmitters – DP and Pressure 1-42
Multi-Variable Transmitters (Model 205) –Temperature 1-43
Display Calibration 1-47
Verifying Digital Inputs and Outputs 1-48
CHAPTER 2: Data Entry 2-1
Introduction to the MicroMVL Software 2-1
Configuration File through Window Program 2-1
New 2-1
Open 2-1
Close 2-1
Save 2-1
Save As 2-1
VIEW 2-2

View Drawings 2-2
TOOLS 2-3
Com Port Settings 2-3
Meter Configuration 2-5
Download Firmare/Image File 2-39
Security 2-39
Connect to Device 2-39
Go Offline 2-39
Modbus Driver 2-39
PID OPERATING 2-40
CALIBRATION 2-40
Calibrate Mode 2-40
Calibration - Display 2-40
Parameter Overrides: 2-41
Temperature Override 2-41
Pressure Override 2-41
API/SG/Density Override 2-41
Orifice ID Override 2-41
Current Batch Preset 2-41
Equilibrium Pressure Override 2-42
Alpha T E-6 Override 2-42
Wedge Fa Override and Wedge Kd2 Override 2-42
Venturi C Override 2-42
SYSTEM 2-42
HISTORICAL DATA 2-43
VIEW, CAPTURE AND STORE 2-43
Viewing Previously Captured Reports 2-44
Exporting or Printing Reports 2-45
SCHEDULED AUTO POLLING 2-46
Historical Report Examples 2-47
CHAPTER 3: Data Entry 3-1
MAIN MENU 3-2
Security Code 3-2
Calibrate /1=M.Var 3-3
Enable Calibrate Mode 3-3
Calibrate Analog Input, RTD 3-3
Calibrate Analog Output 3-5
Calibrate Multivariable 3-6
Override Meter No. 3-7
Batch/Date/Time 3-7
Print/Configuration 3-9
Configuration 3-9
Configue Meter 3-9
Flow Equation Type (1-6) 3-9
New AGA3/Venturi/Wedge Meter 3-10
Frequency Device 3-11
Configure I/O 3-11
Analog Output 3-12
Meter I/O 3-13
Status Input /Switch Output Assignment 3-14
Switch Output Assignment 3-16
Flow Computer Display Assignment 3-17
Pulse Output 3-18
Others 3-18
Snapshot Report 3-18
Historical Report – Batch/Daily/Hourly 3-18

CHAPTER 4: FLOW EQUATIONS 4-1
API 14.3 4-1
Wedge 4-2
Venturi 4-3
Frequency Device 4-4
Cone/Smart Cone 4-5
DENSITY EQUATIONS 4-6
Sarasota Density GM/CC 4-6
UGC Density GM/CC 4-7
Solartron Density GM/CC 4-8
UGC2 Density GM/CC 4-9
Propylene Density 4-10
Ethylene Density 4-10
NBS 1045 4-10
NIST14 4-10
DENSITY EQUATIONS (Without Live Densitometer) 4-11
CHAPTER 5: MODBUS DATA 5-1
MODBUS PROTOCOL 5-1
TRANSMISSION MODE 5-1
ASCII FRAMING 5-1
RTU FRAMING 5-1
FUNCTION CODE 5-2
ERROR CHECK 5-2
EXCEPTION RESPONSE 5-2
BROADCAST COMMAND 5-2
MODBUS EXAMPLES 5-3
FUNCTION CODE 03 (Read Single or Multiple Register Points) 5-3
Modbus Address Table – 16 Bits Integer 5-6
Modbus Address Table – 2x16 Bits Integer 5-14
Last Batch/Daily Data Area 5-18
Previous Batch Data 5-32
Last Hourly Data Area 5-34
Last Hour Data Area 5-39
Yesterday Data 5-40
Current Data Area 5-42
Alarm and Audit Trail Data 5-48
Previous Data Alarm Area 5-48
Previous Audit Data Area 5-49
Current Alarm Status 5-52
Modbus Address Table - Floating Point 5-54
Current Data Area– Meter #1 5-56
Historical Batch/Daily Data Area – Meter #1 5-57
Historical Hourly Data Area – Meter #1 5-58
Current Data Area– Meter #2 5-59
Historical Batch/Daily Data Area – Meter #2 5-60
Historical Hourly Data Area – Meter #2 5-61
Programmable Floating Point Variables 5-62
CHAPTER 6: Installation Drawings 6-1
Explosion-Proof Installation Drawings 6-1
Manifold Installation Drawings 6-4

CHAPTER 1: QUICK START

Introduction:

The micro MV Liquid Flow Computer business was designed after careful consideration to our customers in all sectors of the oil and gas industry. It was built to address the different needs for refineries, chemical plants, gas processing plants, offshore platforms, pipeline and transmission, remote gas wells, and storage caverns. The focus has been to bring the different needs and requirements of these specialized industries into one hardware platform and therefore reducing the spare parts requirements, the training process, calibration, and overall cost of ownership. We believe the Micro MV Liquid Flow Computer has delivered and met the design intentions.

The Micro MV Liquid Flow Computer combines the following features:

- User Friendly
- Flexible
- Easy to understand and configure
- Rugged
- Economical to install and maintain
- Accurate

We hope that your experience with the Micro MV Liquid Flow Computer will be a simple pleasant experience, not intimidating in any way.

General Description: The Micro MV Liquid Flow Computer is a dual meter run bi-directional flow computer for the measurement of liquid products. Using orifice plate, Venturi, turbine/PD/ultrasonic mass meter, or wedge devices, it can meter a wide variety of products, such as crude, refined product, LPG/NGL products, products that use table 24C, ethylene, propylene, and water. Thirty-two days of previous daily data, thirty-two previous batch data, and thirty-two previous hourly data are stored in the full format type reports. The previous 100 audit trail reports and 100 alarm reports are stored. Sixteen different product files are user-configurable with easy switch feature and product scheduling for batch operation.

One Multi-variable digital transducers can be connected to each Micro MV flow computer for temperature, pressure (up to 3626 PSIG), and DP (up to 830 inches H_2O). Other multi variable transmitters can be connected to the Micro MV Liquid Flow Computer via RS485 serial interface. Up to four meter runs can be stored and calculated in a single Micro MV Liquid Flow computer. The 2nd RS485 is used as a slave or a master Modbus port for data acquisition and other serial functions.

The Micro MV Liquid Flow Computer has a host of inputs and outputs beyond the built in Rosemount Multi Variable transmitter.

Three high speed frequency inputs (Sine or Square wave), 70 mV peak to peak or sine wave 6 volts, or lighter on square wave

Four additional analog inputs, or two analog inputs and one three wire RTD inputs

One analog output expandable to four

One RS232 and two RS485 with Modbus protocol, and one additional serial printer output

4 status inputs or digital outputs (user configurable). The fourth digital I/O is optional.

Additionally, each Micro MV Liquid Flow Computer can store up to 32 hours of hourly and 35 days of daily data. Optional expandable memory (Virtual Hard Drive) up to 128 Megs; combined with our customized data storage allows almost any type data logging task to become possible.

Quick Start Up

Version 2 - MicroMV Main/Memory Boards (Micro2009 and Later Model)

Main Board

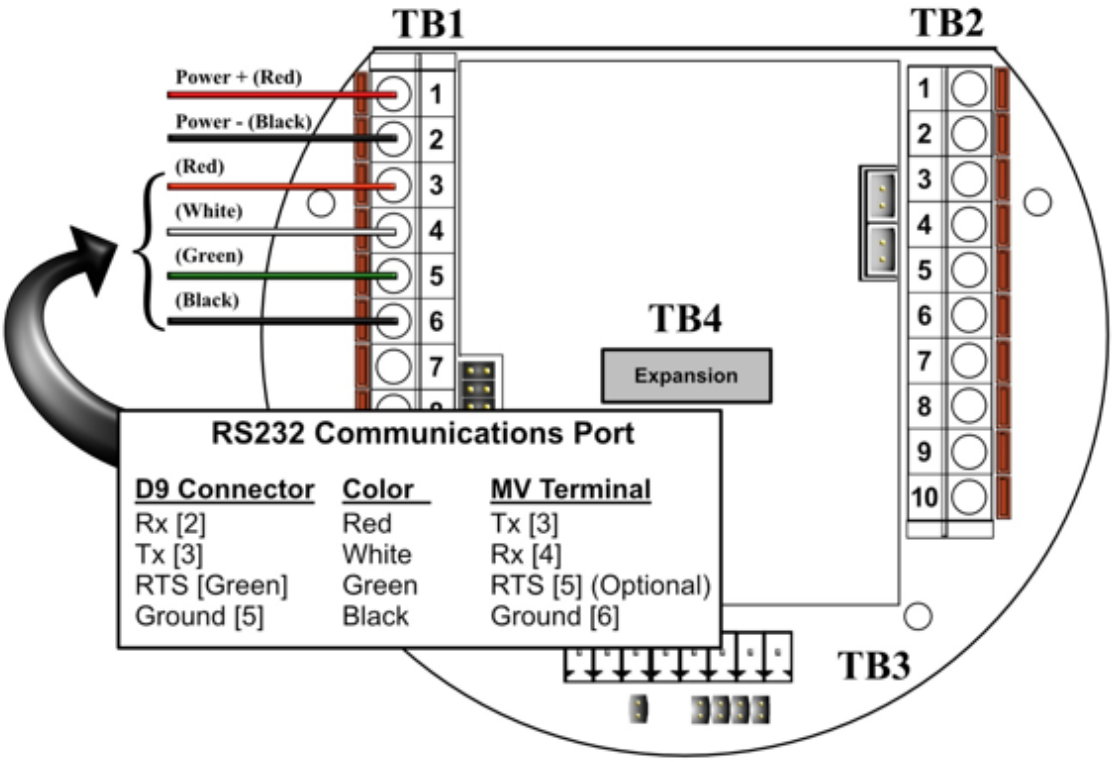

MV Step by Step Startup:

1. **Connect power supply cable**
2. **Connect RS-232 Communications**
3. **Ensure jumper JP1 is installed on memory board**
4. **Energize power supply (24 Volts Recommended)**
5. **Verify display comes on**
6. **Run DFC Software**
7. **Configure the Micro MV device**

Version 2 - MicroMV Main/Memory Boards (Micro2009 and Later Model)

Memory/CPU Board

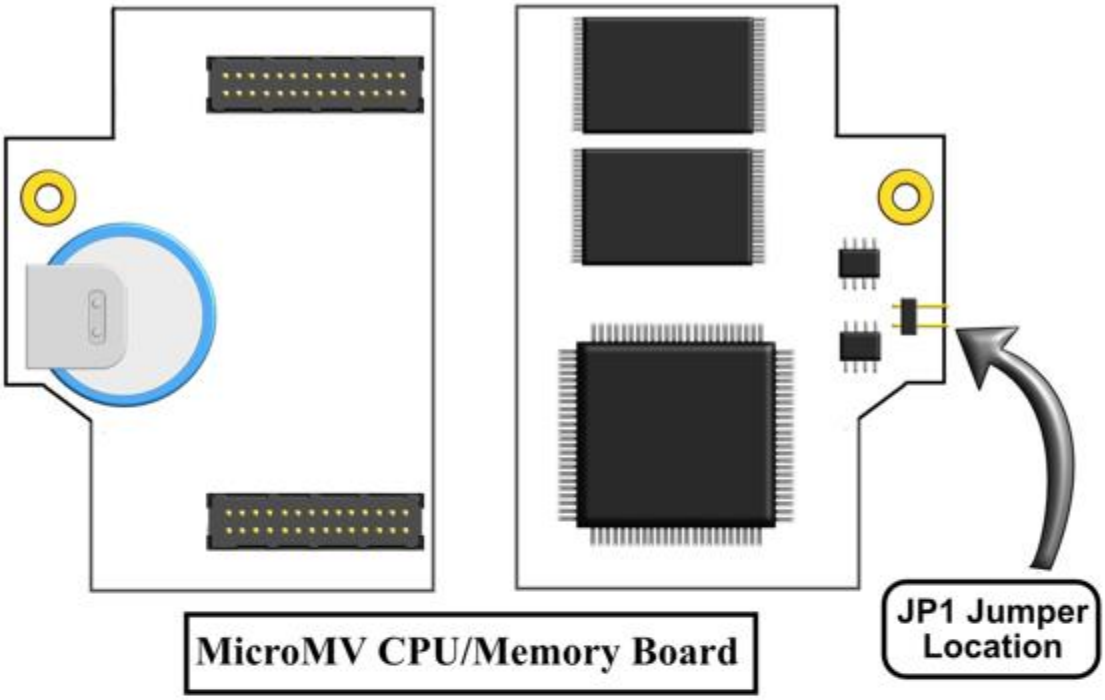

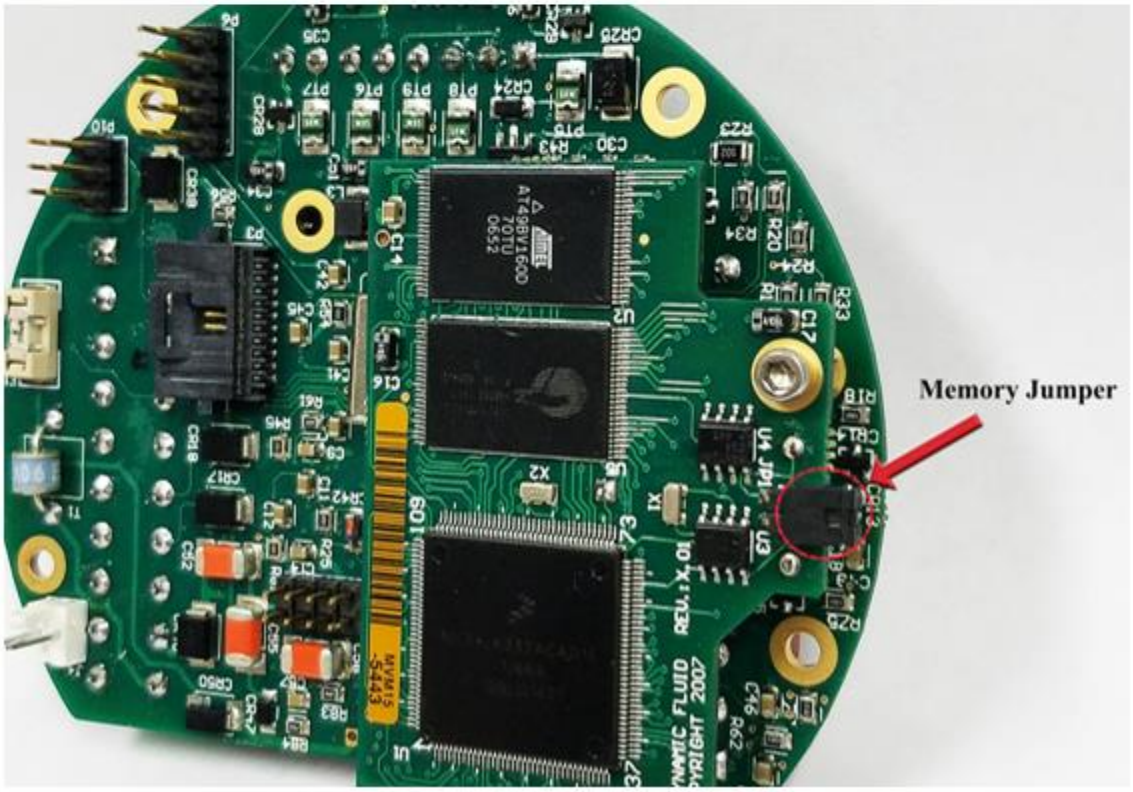

Version 1 - MicroMV Board (Older MicroMV Models)

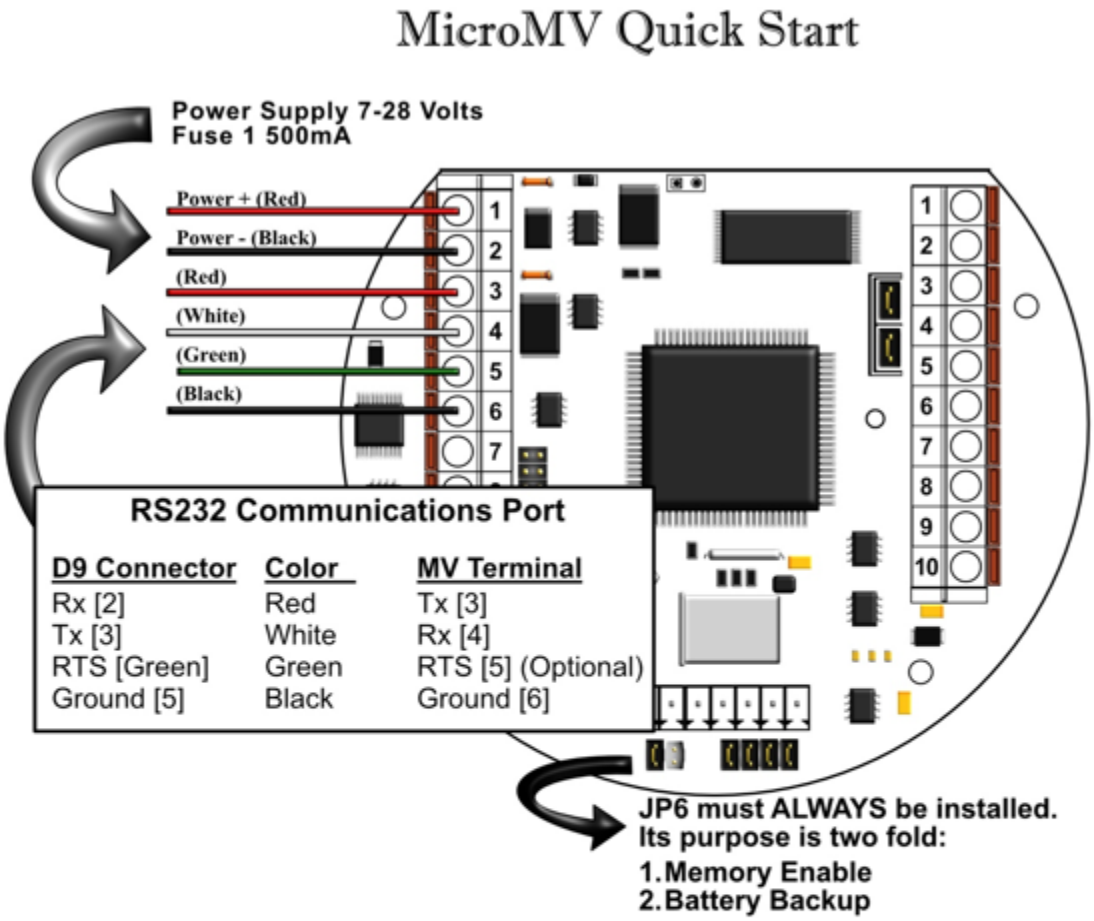

MV Step by Step Startup:

1. Connect power supply cable
2. Connect RS-232 Communications
3. Ensure jumper JP6 is installed
4. Energize voltage (24 Volts Recommended)
5. Verify DynacomTM Software
6. Run DynacomTM Software
7. Configure the Micro MV unit
8. Consult the Faultfinding if a problem is incurred

Version 1 - MicroMV Board (Older MicroMV Models)

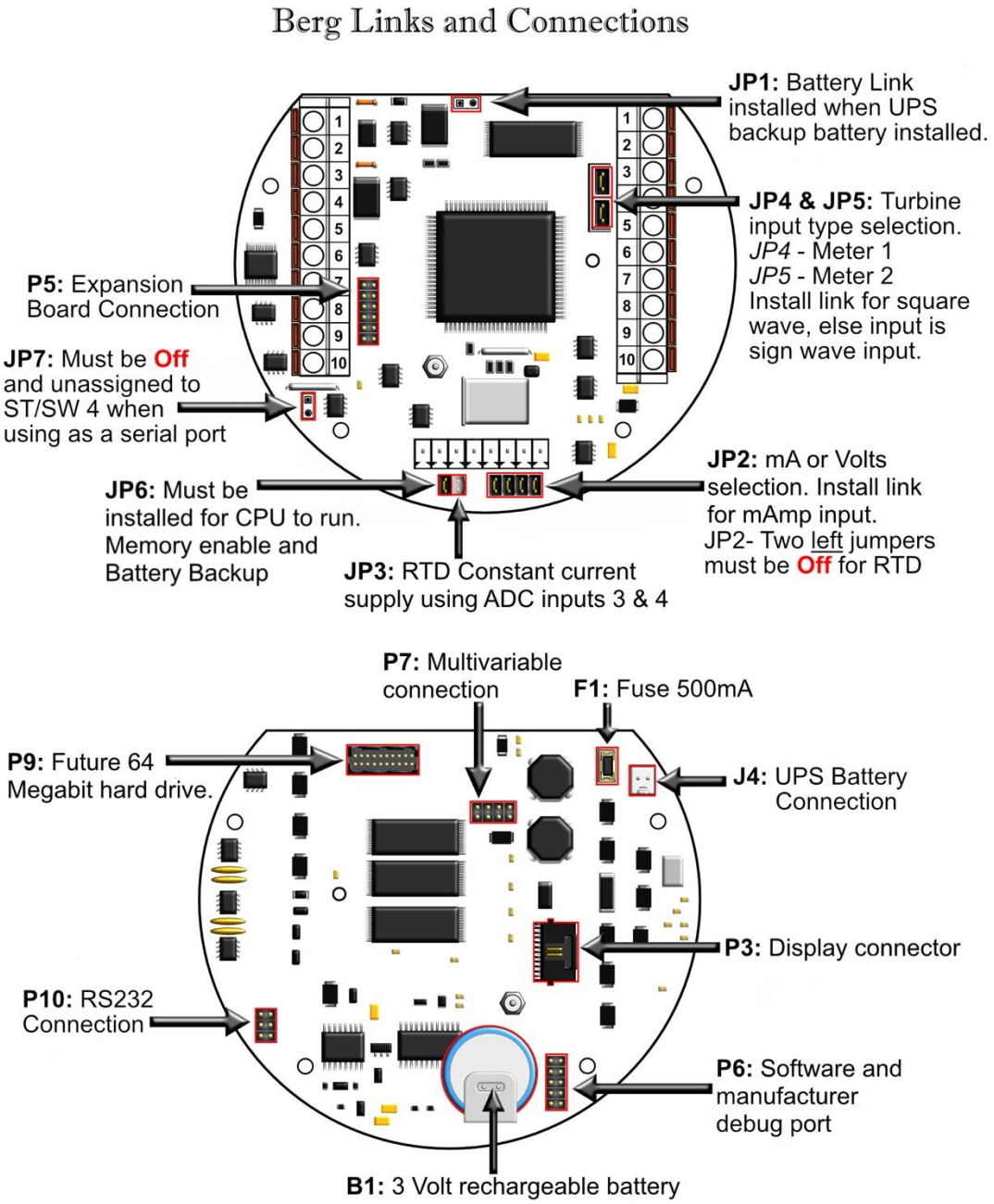

Version 2 - MicroMV Main Board (Micro2009 and Later Model)

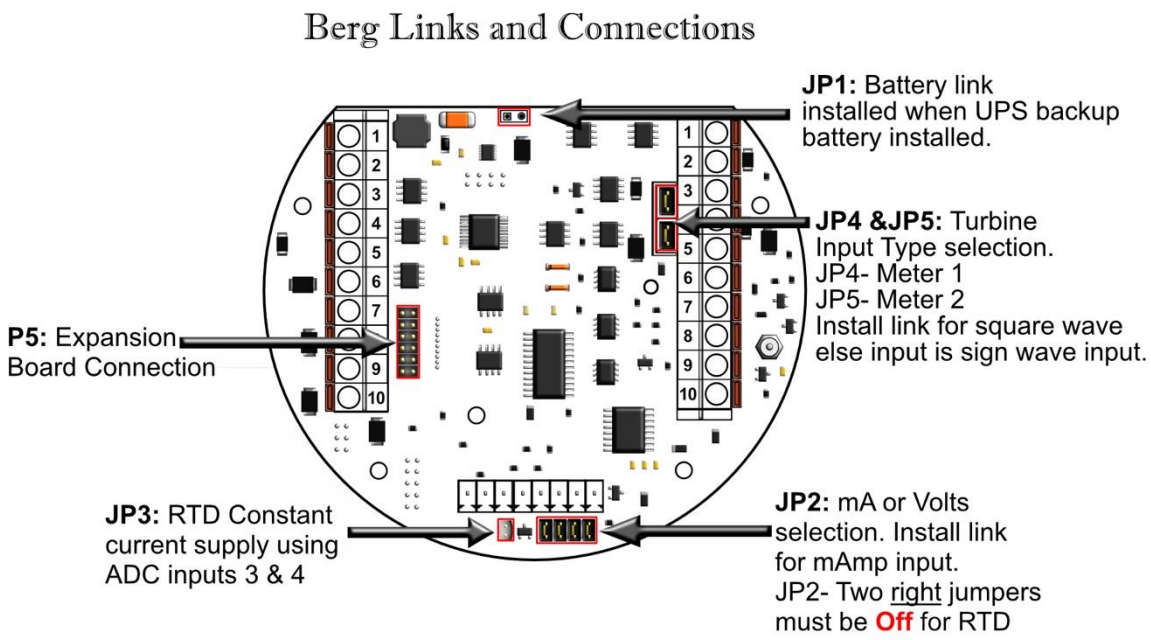

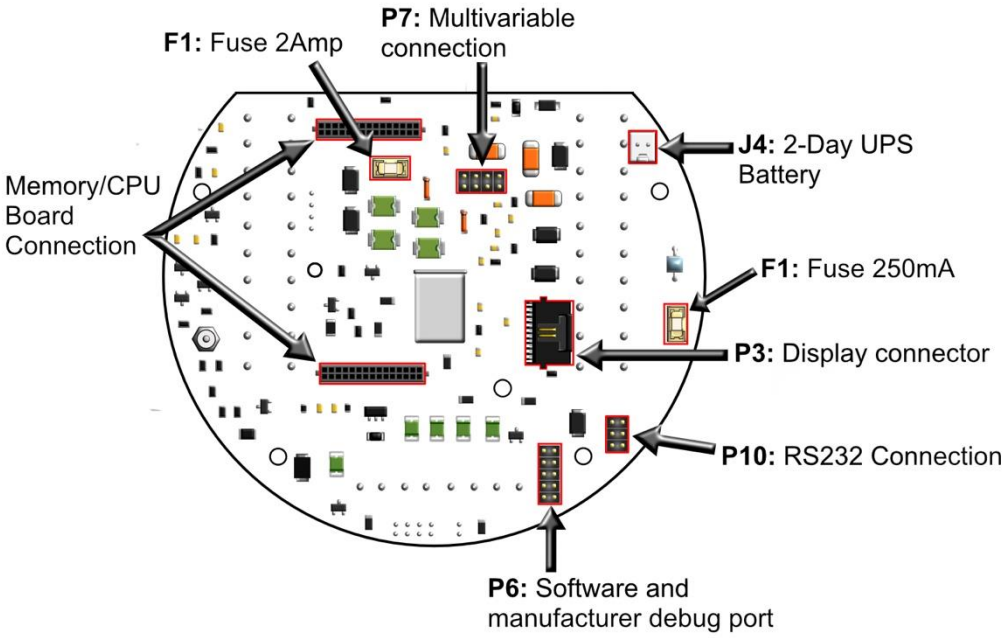

Version 2 - MicroMV Memory/CPU Board

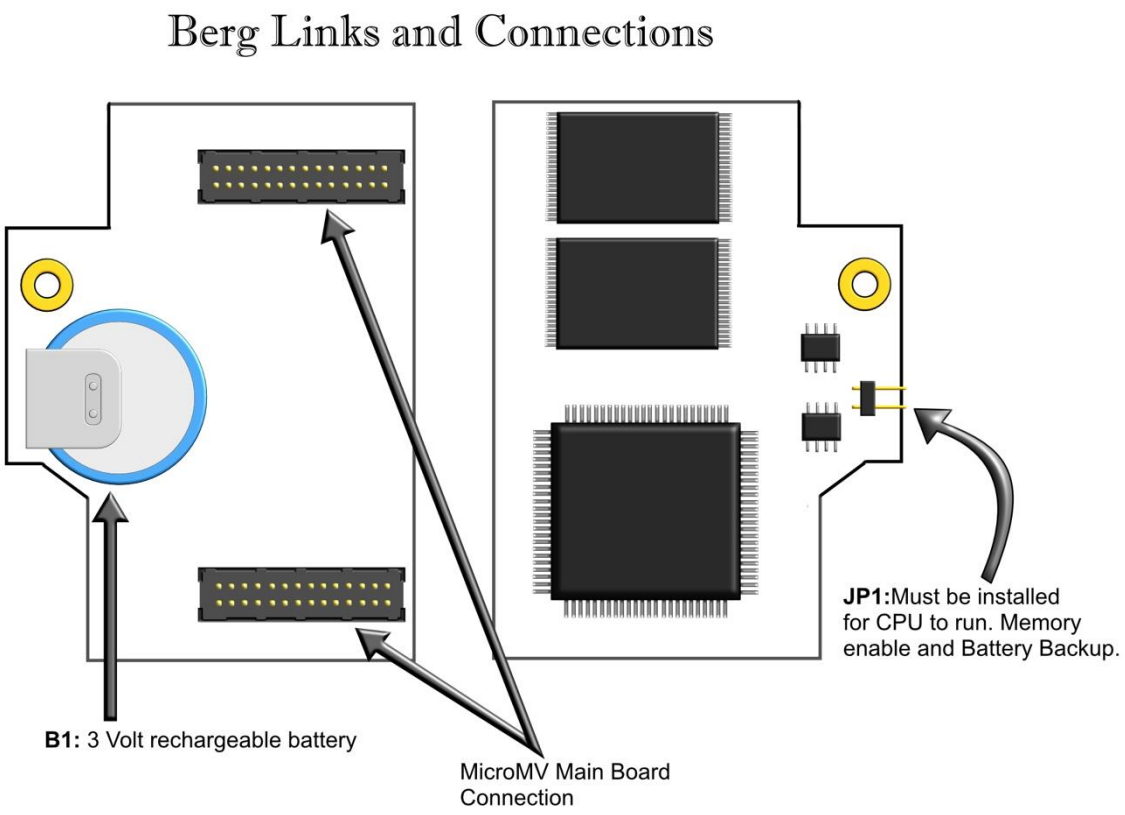

Technical Data

POWER	
VOLTAGE RANGE	7-28 VDC
POWER CONSUMPTION	0.5 WATT
OPERATING CONDITIONS	
TEMPERATURE	- 40 TO 185 °F
HUMIDITY	100%
HOUSING	NEMA 4X CLASS 1 DIV. 1
FEATURES	
DISPLAY	PLASMA 4 LINES 20 CHARACTERS BACKLIT DISPLAY WITH 4 INFRARED REFLECTIVE SENSORS
PROCESSOR	32-BIT MOTOROLA 68332 @ 16.7 MHZ
FLASH ROM	4 MBITS @ 70 NANO SECONDS
RAM	2 MBITS
FREQUENCY INPUT	3 CHANNELS CHANNELS 1 & 2 ARE SINE/SQUARE WAVE CAPABLE CHANNEL 3 IS SQUARE WAVE ONLY SQUARE WAVE RANGE 0 - 6000 HZ SINE WAVE RANGE 0 – 1200 HZ SIGNAL > 40 mV FOR SINE WAVE SIGNAL > 5 VOLTS and < 12 VOLTS FOR SQUARE WAVE (CHANNELS 1 & 2)
ANALOG INPUT	4 INPUTS STANDARD EXPANDABLE UP TO 9 ANALOG INPUTS OR 7 WITH ADDITIONAL 3 WIRE RTD.
MULTIVARIABLE	BUILT-IN MULTIVARIABLE TRANSMITTER WITH DIRECT SPI DIGITAL CONNECTION. MAXIMUM UPDATE SPEED ONCE EVERY 109 MILLISECONDS.
ANALOG OUTPUT	ONE (1) OPTICALLY ISOLATED 16 BITS EXPANDABLE TO FOUR (4)
DIGITAL I/O	4 DIGITAL INPUTS OR OUTPUTS. DIGITAL OUTPUTS HAVE 0.25 AMPS RATING.
SERIAL	Up to 2 RS485 @ 9600 BAUDS VARIABLE 1 RS232 @ 9600 BAUDS VARIABLE 1 PRINTER OUTPUT
COMMUNICATION PROTOCOL	MODBUS

Parts List

Spare Parts - Micro MV	
Part #	**Description**
MVC	Micro MV CPU Main Board Only
MVM	Micro MV CPU Mempry Board Only
MVD	Micro MV Display Board
MVI	Micro MV Analog In Board
MVO	Micro MV Analog Out Board
MVP	Micro MV Prover Board
MVR	Micro MV Rosemount Board
S6920	Explosion Proof Housing Unit for Micro MV Flow Computer
Adapter A	Adapter for 0205 Rosemount Transmitter (Accommodates Micro MV Flow Computer)
Bracket-MVD	Bracket for Micro MV Display
Bracket-MVC A	Bracket for Micro MV CPU (Without Analog)
Bracket-MVC B	Bracket for Micro MV CPU (With Analog)
MVD Cable	Micro MV Display Ribbon Cable
O-Ring A	O-Ring Gasket for Micro MV Housing
Fuse A	250 mA Fuse
Fuse B	500 mA Fuse
Fuse C	2 Amp Fuse
Battery A	Replacement Battery for Micro MV Flow Computer (Board Mounted)

Micro MV Flow Computer: Dimensions

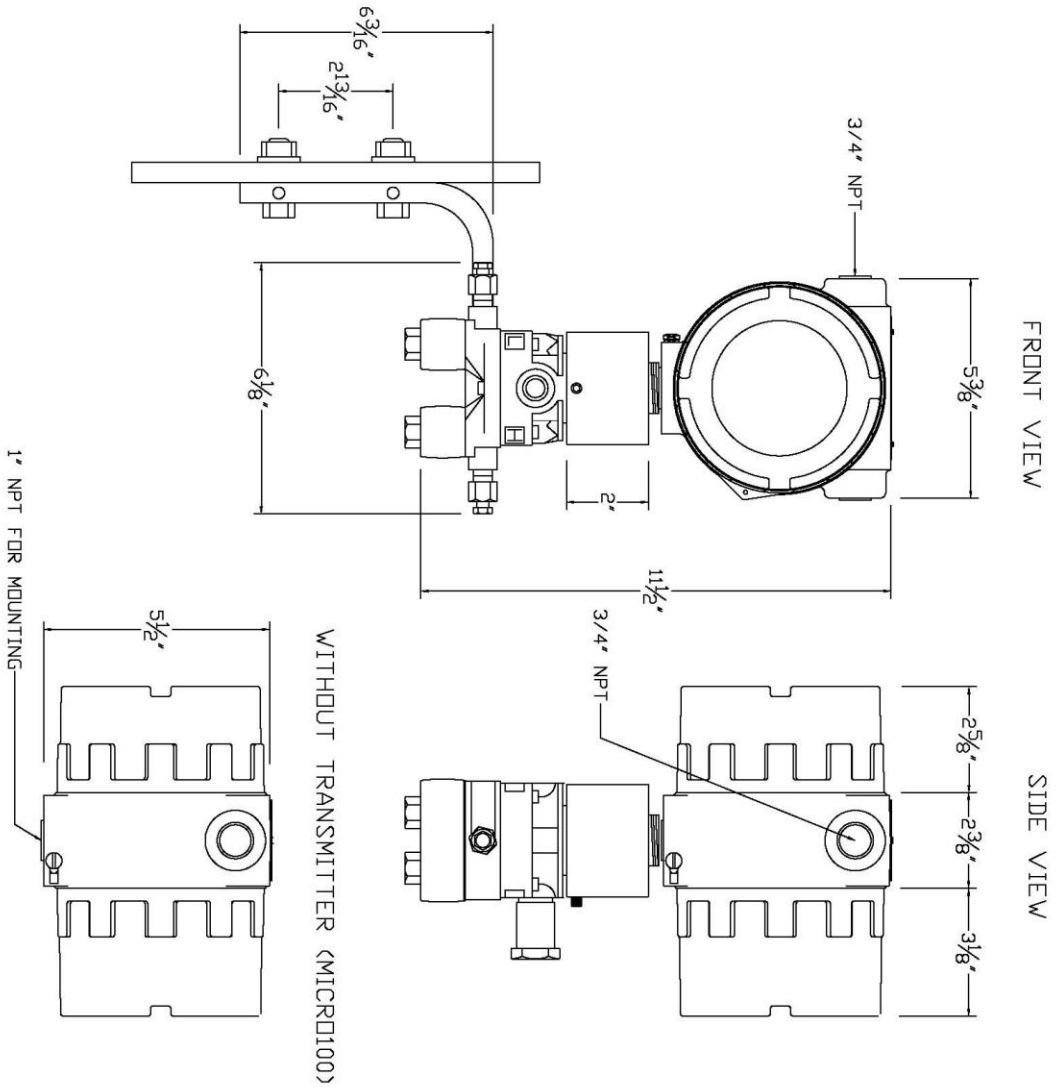

Window Software Minimum Requirements:

Please make sure your computer has the minimum requirements to install Dynamic's Dynacom software.

System Minimum Requirements

In order to install this software product the following requirements must be met:

- Windows Operating System (Win95, Win98, Win98SE, win2000, WinNT, WinXP, Vista, Windows 7, Windows 8, Windows 10)
- For Windows NT, 2000, XP or Vista: Administrator level access to create an ODBC system DNS.
- Minimum disk space available: 16 MB.
- 1 Serial Communication Port

If your computer meets these requirements, you can run the setup file downloaded from our website

What is a configuration file?

The configuration file is an archive that contains the data used by the flow computer to determine calculation settings (Pipe ID, Flow Equation, Meter ID, etc.) and input/output assignments.

Downloading a configuration file to the flow computer.

- Open the configuration file using the **Configuration File | Open…** option on the main menu or pressing the open button in the toolbar. Once the file is open the file name will appear on the upper left corner of the window, so you can verify that the desired file was open.

- Connect to the Flow Computer either by using the **Tools | Connect to Device** option on the main menu, the

button on the vertical toolbar, or by pressing the **[F5]** key on the keyboard. Once you are connected the application it will show an ONLINE status on the upper right corner of the main window. Failure to communicate can occur because of a communication wiring problem, wrong PC port selection, communication parameter mismatch between PC and MicroMV (Modbus type, parity, baud rate, etc.) or lack of power to the MicroMV Flow Computer. To use **"Tools | Com Settings | Auto Detect Settings"** option, the user must insure that **only one MicroMV** computer is connected to the PC. More than one MicroMV Flow Computer in the loop will cause data collisions and unintelligible responses.

- Go to the configure device option either by using the **Tools | Meter Configuration** option, the

button on the vertical toolbar, or by pressing the **[F10]** key on the keyboard.

- Because you are connected to a device, a window will appear asking you if you want to read the configuration from the connected meter, Press **NO** since what we want is to write the PC file to the flow computer.

- A configuration window will now appear showing you the information in the configuration file, you can check these values to make sure this is the file you want to send to the flow computer. Once you have checked that the configuration is correct, press the **[Download]** button. A blue bar indicating the progress of the download will appear at the bottom of the application window, after that the information in the configuration file will be in the flow computer.

Note: In case the flow computer is a liquid application, remember to End Batch after the configuration in downloaded for the changes to take effect.

What is an Image File?

An image file is an EPROM code for a certain purpose (liquid, gas, prover, etc.) **The image file is only done when an application upgrade is needed**.

When an image file is downloaded to the flow computer, all the information in the computer is lost (configuration and historical data), so make sure to retrieve all the important information before changing the image file.

How to download an Image File

- Download an image file through **RS232 port** only.
- To Download an Image File to the Flow Computer select the **Tools | Download Program** option form the main menu or press the button in the toolbar.
- A small dialog will appear asking for the file name of the image file (Image file have the extension .img). Type it in or use the **Browse** button to locate it.
- Once the file name is in place press **Download**.
- If a retry message of small dialog appears, try to use **"Tools | Com Settings | Auto Detect Settings"** option, the user must insure that **only one MicroMV** computer is connected to the PC. More than one MicroMV Flow Computer in the loop will cause data collisions and unintelligible responses. Failure to communicate can occur because of a communication wiring problem, wrong PC port selection, communication parameter mismatch between PC and MicroMV (Modbus type, parity, baud rate, etc.) or lack of power to the MicroMV Flow Computer. After the device is detected, then you can follow steps described above.

Warning messages will remind you that this action will erase **ALL** the information in the flow computer.

The download task will take about 7 minutes to be completed. Once the image file is in place, the flow computer is ready to be configured (enter calculation parameters and I/O assignments).

How to force a board into download mode

First, try to recycle the power and reload the image if the error message is displayed while downloading a new image file. Download an image file only through **RS-232 port**. MicroMVL Windows Software version 2.18 or higher is required. Contact technical support for old boards loaded with downloader v1.
Forcing download mode could be required if a wrong type of application image was loaded or other issues. Call our main office for more information

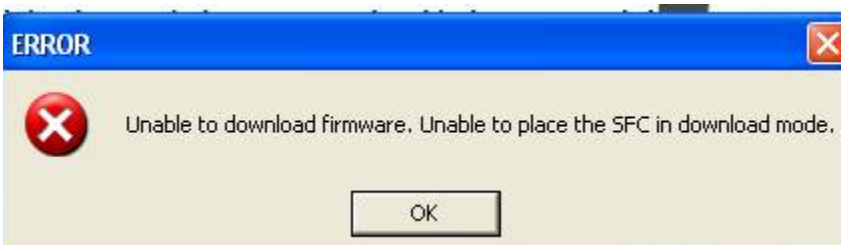

Steps to force the board into download mode.
(1) Remove Power
(2) Put a jumper on P6 as shown below.

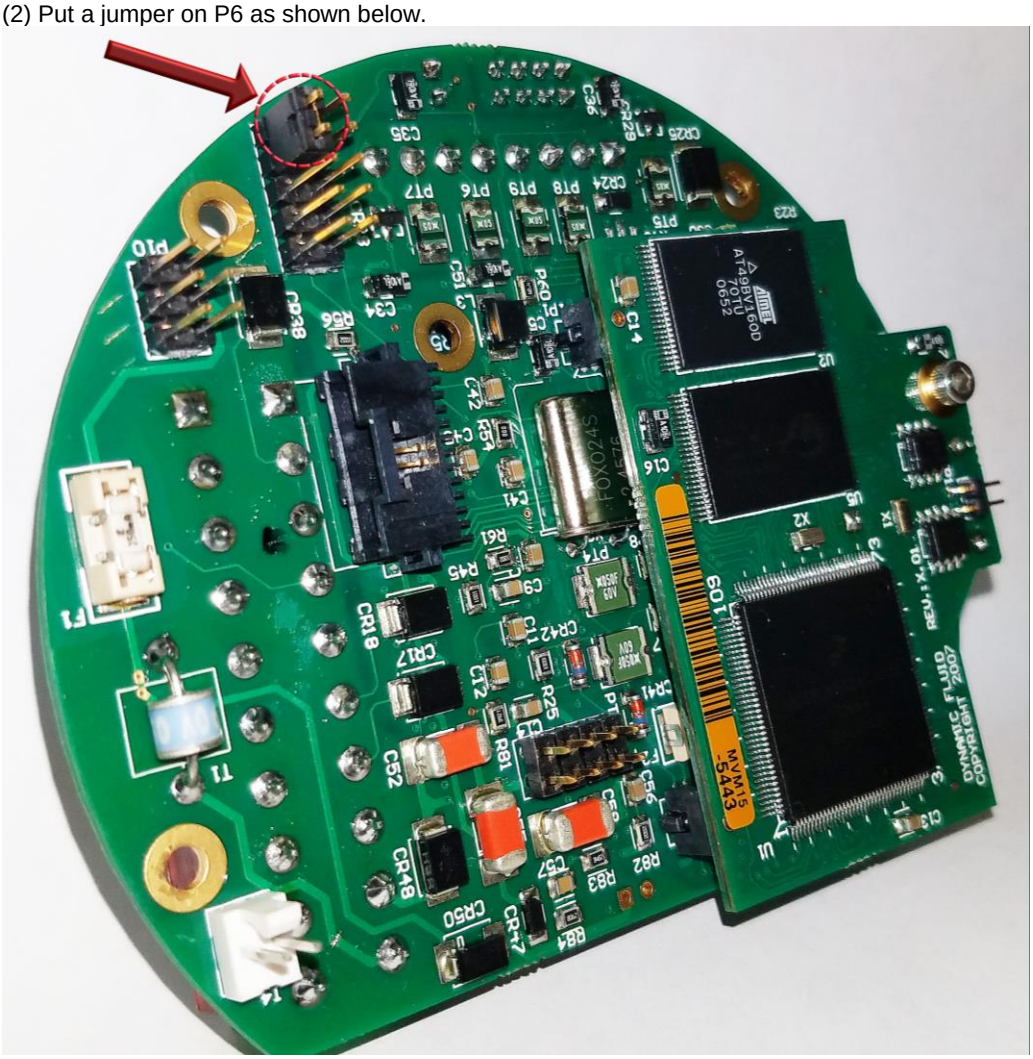

(3) Power up the board
(4) Board is in download mode
(5) Download image
(6) Remove power and jumper on P6 after a new image is loaded
(7) Board is ready

Website - DFC Configuration Software

Step 1. Go to our website WWW.DYNAMICFLOWCOMPUTERS.COM

Step 2. Click on the "**Downloads**"

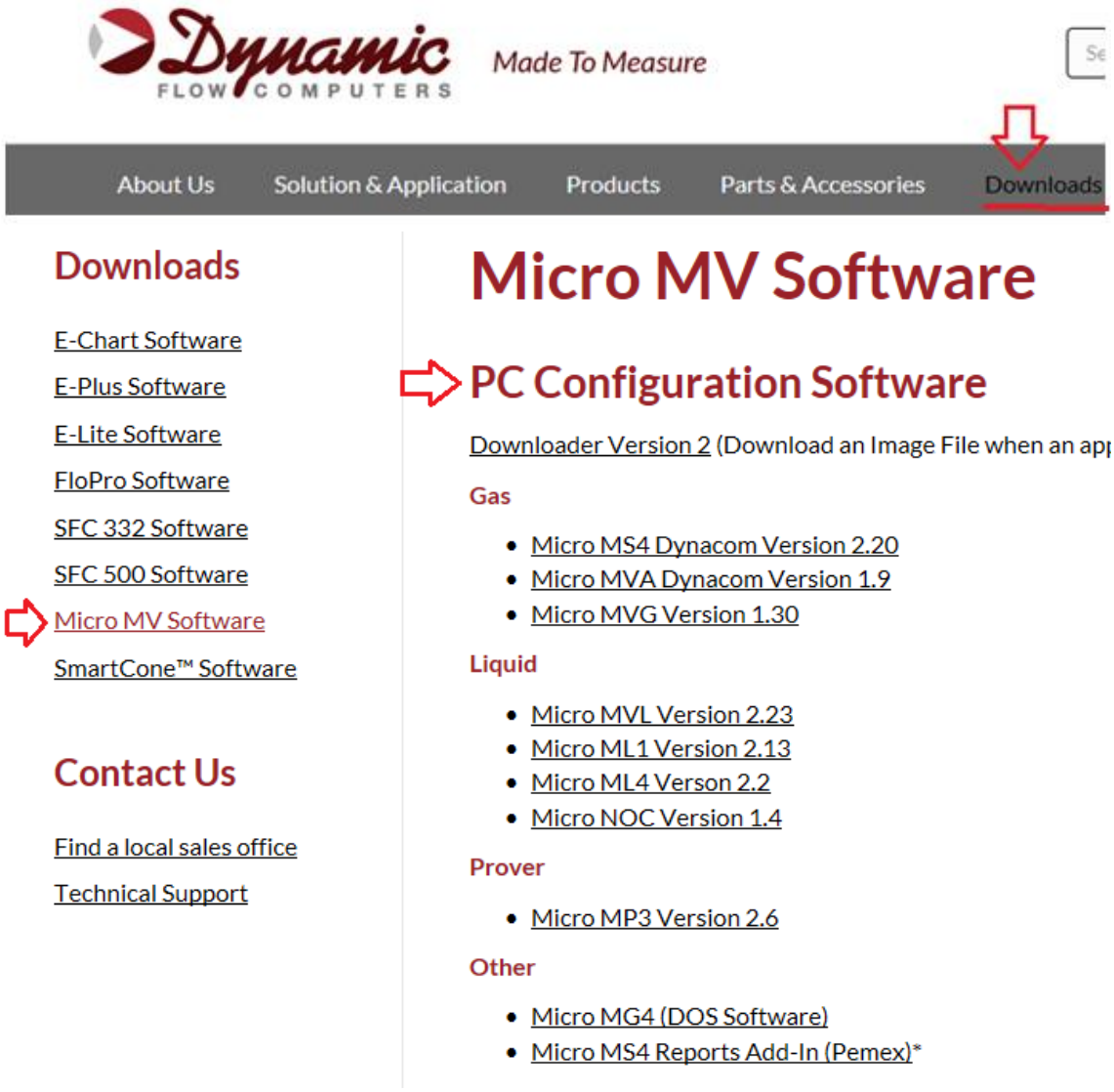

Step 3. Select application software based on Step 2.

Step 4. On the new screen presented to you click on the application that you are trying to download. Once you hit the link it will ask you if you want to run or save the file in your computer. Select **SAVE.** (See illustration 1)

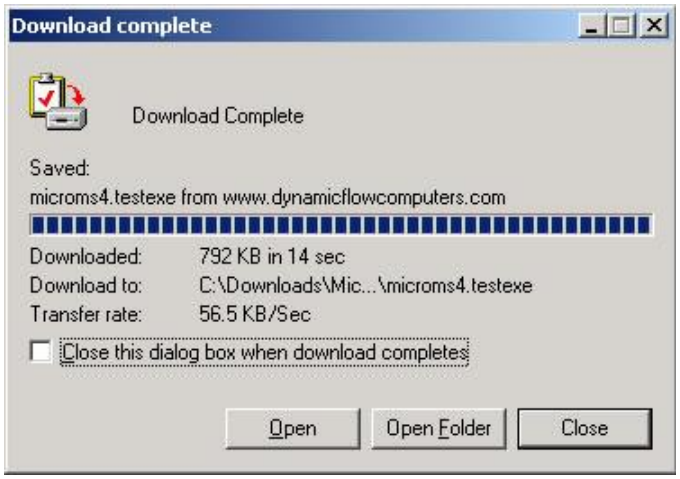

Step 5. The file will start to transfer to your computer. The download time depends on your Internet connection speed and the type of application that being downloaded.

Step 6. When the download if finish. Press the **OPEN** button to start the setup process. (See Illustration)

Step 7. Follow the steps in the application setup.

Website – Image File (Firmware)

Check the version number of image file. **The image file is only done when an application upgrade is needed**.

Step 1. Go to our website WWW.DYNAMICFLOWCOMPUTERS.COM

Step 2. Click on the "**Downloads**"

Step 3. On the new screen presented to you click on the application firmware that you are trying to download. Once you hit the link it will ask you the location and file name to be saved.

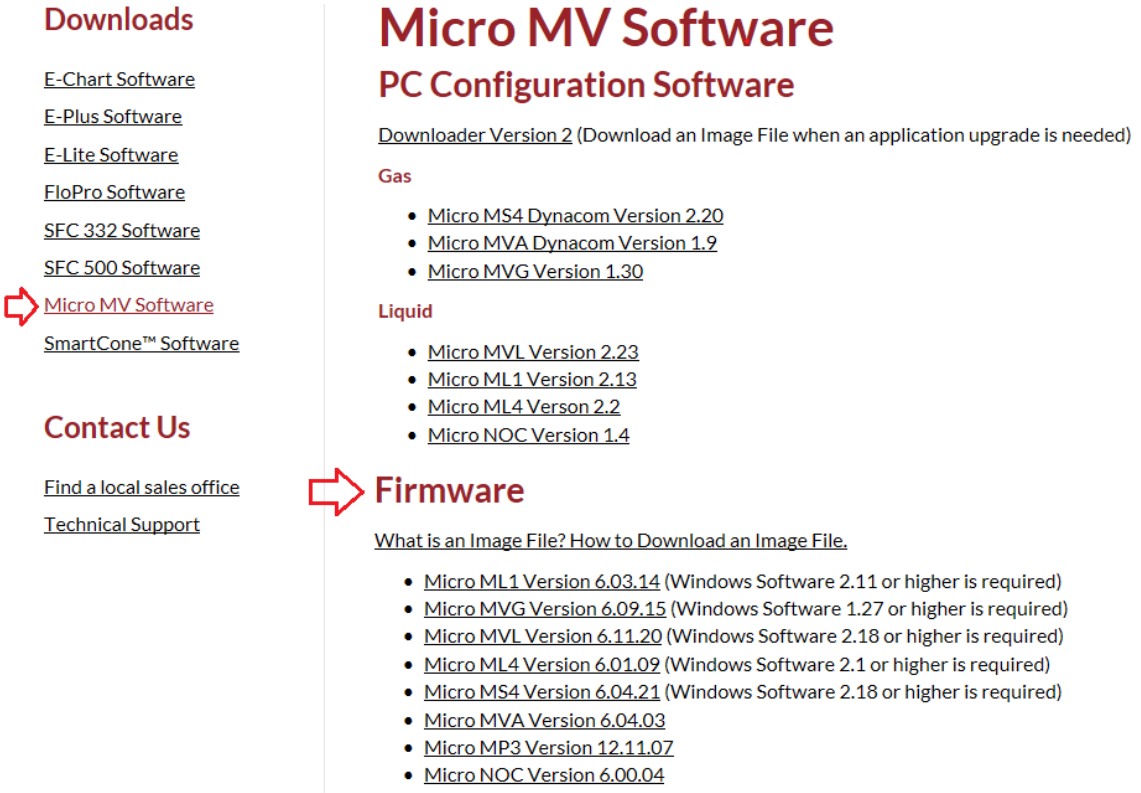

Step 4. The file will start to transfer to your computer. The download time depends on your Internet connection speed and the type of application that being downloaded.

Step 5. After the download is finished, follow the steps in the image downloading setup.

Getting acquainted with the flow computer wiring:

Back Terminal Wiring:

The back terminal wiring indicates the overall positions of the terminal plugs and their functions. Though the back panel's jumpers are also shown, refer to the next drawing, "Back Panel Jumpers", for information on their settings and functions.

The MicroMV receives its power via the .top two pins on Terminal P1, on the left of the board. Also on Terminal P1 from top to bottom are inputs to the four serial connections

To the right (P4), from top to bottom, are two turbine inputs, density frequency input, and switch/status inputs and output.

Terminal P3, at the lower bottom, handles analog inputs/RTD and analog output.

VERSION 2 - MICROMV MAIN/MEMORY BOARDS (MICRO2009 AND LATER MODEL)

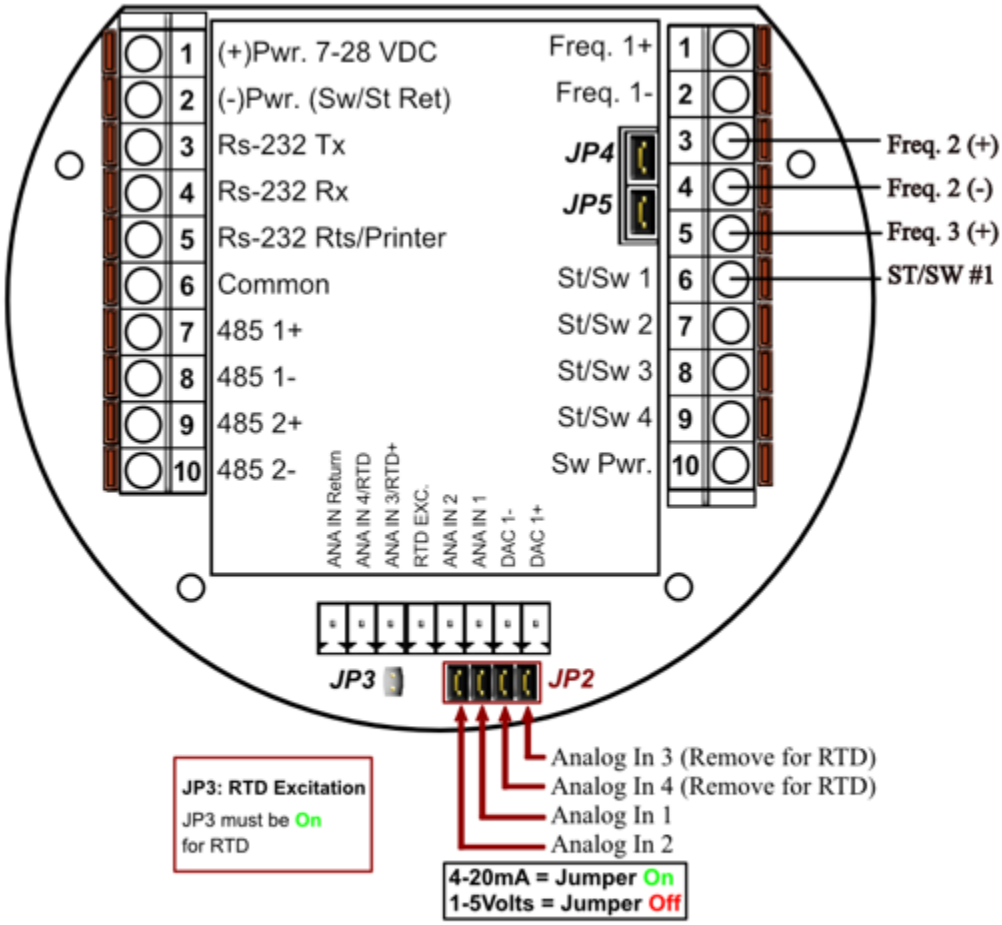

JP4: When ON Meter 1 Uses Square Wave. When OFF Meter 1 Uses Sine Wave
JP5: When ON Meter 2 Uses Square Wave. When OFF Meter 2 Uses Sine Wave

VERSION 1 - MICROMV BOARD (OLDER MICROMV MODELS)

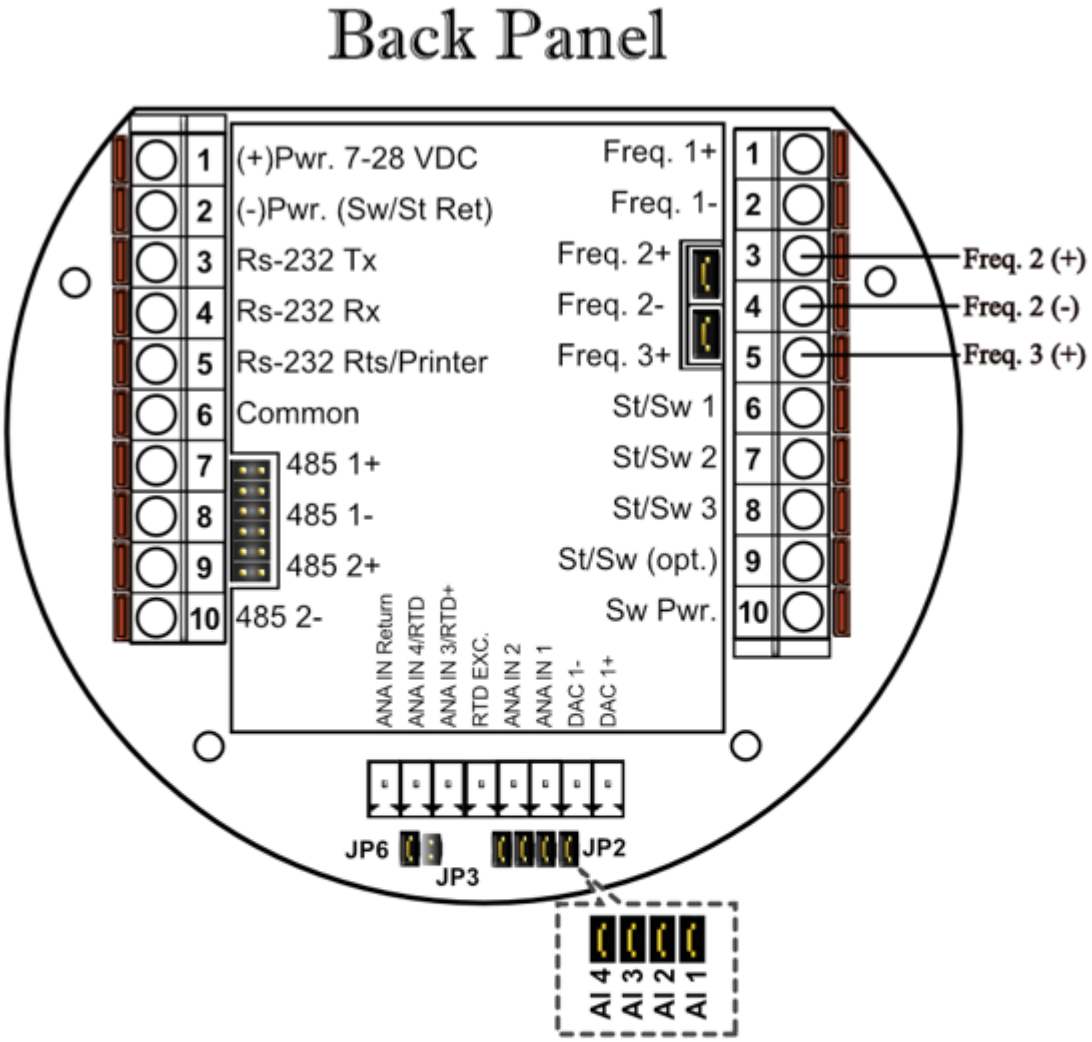

JP2: Must be installed for 4-20mA inputs. When removed, the analog input is used as 1 to 2.5 Volts Input. JP2 consists of 4 links, each link corresponds to one analog input.

JP3: Is RTD Excitation and should never be installed when Analog 3 & 4 are used as Analog inputs (See RTD Connection for details).

JP4: When ON, Meter 1 Uses Square wave.When OFF, Meter 1 Uses Sine wave

JP5: When ON, Meter 2 Uses Square Wave. When OFF, Meter 2 Uses Sine Wave

JP6: Always installed. It can be removed after power is removed to clear RAM memory.

INPUT/OUTPUT: Assigning and Ranging Inputs

Input/Output Assignment

We will now configure your Micro MV Liquid Flow Computer's inputs and outputs. The flow computer allows the user to configure the inputs and outputs. The flow computer will not use the unassigned inputs.

How to assign a transmitter to an I/O point

1 Click "Configure Device", configuration menu is prompted

2 On configuration menu, click "Input Assignment"

3 Enter assignments for DP, temperature, pressure, density and spare inputs.

4 **Assignment (1-*n*).** Assignments 1-4 are analog inputs attached to terminal of the back panel. These inputs accept 4-20mA or 1-5 volts input (version 2 board)/1-2.5 volts input (version 1 board) and are suitable for temperature, pressure, density, or spare inputs. An assignment 5 is strictly RTD (temperature) input only for the meter, densitometer or spare. Assignment 7 indicates a density frequency input; it is assigned automatically once you choose live density frequency input in the setup menu at density type Assignment 10 (module 1) is for multi-variable module only. DP, pressure, and temperature for the meter can be assigned. When a frequency type primary element is hooked to the flow computer, the Multi Variable pressure and temperature can be used and the DP becomes a spare input that could be assigned for strainer differential.

Ranging the Transmitter Inputs:

1. **Enter the range values for analog inputs**: after assigning the analog inputs, click square box next to the assignment to scale the 4-20mA. Enter the value at **`@4mA`** and **`@20mA`**. Enter both values similar to the way the transmitter is ranged. 1-5 volts are equivalent to 4-20mA. Enter the 1 Volt value at the 4mA, 5 volt value at 20mA. When the Multi Variable is used the 4-20 ma scale has no effect on anything and does not need to be configured for that input. The reason is simply that the flow computer gets the data via digital communication from the transmitter in engineering units, and therefore a scale is not needed. Normal pressure range is 0-3626, temperature –40 to 1200, DP –250 to 250, or -830 to 830 inches of water.
2. **Enter the high and low limits**: high limits and low limits are simply the alarm points in which you would like the flow computer to flag as an alarm condition. Enter these values with respect to the upper and lower range conditions. Try to avoid creating alarm log when conditions are normal. For example: If the line condition for the pressure is between 0 to 500 PSIG. Then you should program less than zero for low-pressure alarm, and 500 or more for high-pressure alarm. High limits are also used in the SCALE for the Modbus variables. The high limit is equivalent to 32767 or 4095. The low limit is not used for calculating the scale. The scale starts at zero to wherever the high limit value.
3. **Set up the fail code:** **`Maintenance`** and **`Failure Code`** values tell the flow computer to use a default value in the event the transmitter fails. The default value is stored in **`Maintenance`**. There are three outcomes: the transmitter value is always used, no matter what (**`Failure Code`** = 0); the **`Maintenance`** value is always used, no matter what (**`Failure Code`** = 1); and the **`Maintenance`** value is used only when the transmitter's value indicates that the transmitter has temporarily failed (**`Failure Code`** = 2).

RTD inputs will skip 4-20 mA assignment because RTD is a raw signal of 50Ω (ohms) to 156Ω. Readings beyond that range require a 4-20 mA signal to the flow computer or using the built in Rosemount Multi Variable transmitter. The Rosemount Multivariable has a range of –40-1200 degrees Fahrenheit.
Density coefficients for raw frequency inputs are programmed in this menu. The menu will only show parameters relevant to the live density selected (i.e., Solartron or UGC, etc.).

WIRING:

Wiring to the flow computer is very straightforward and simple. But still it is very important to get familiar with the wiring diagram.

Wiring of Analog Inputs: Version 2 Board

MicroMV Main/Memory Boards (Micro2009 and Later Model)

Typical wiring for analog inputs 2 and 1 are shown in the drawing. Analog inputs 4 and 3 are to the left of analog 2 and 1 separated by the RTD excitation. Note that the analog input has only one common return that is the -Ve signal of power supply powering the transmitters.

When wiring **1-5 volts**, **make sure to calibrate** the flow computer for the 1-5 volt signal because the flow computer calibration defaults for the 4-20 ma, which is different from the 1-5 volts. JP2 must be removed for 1-5 volt inputs. Signal line impedance provided by our flow computer is 250Ω.

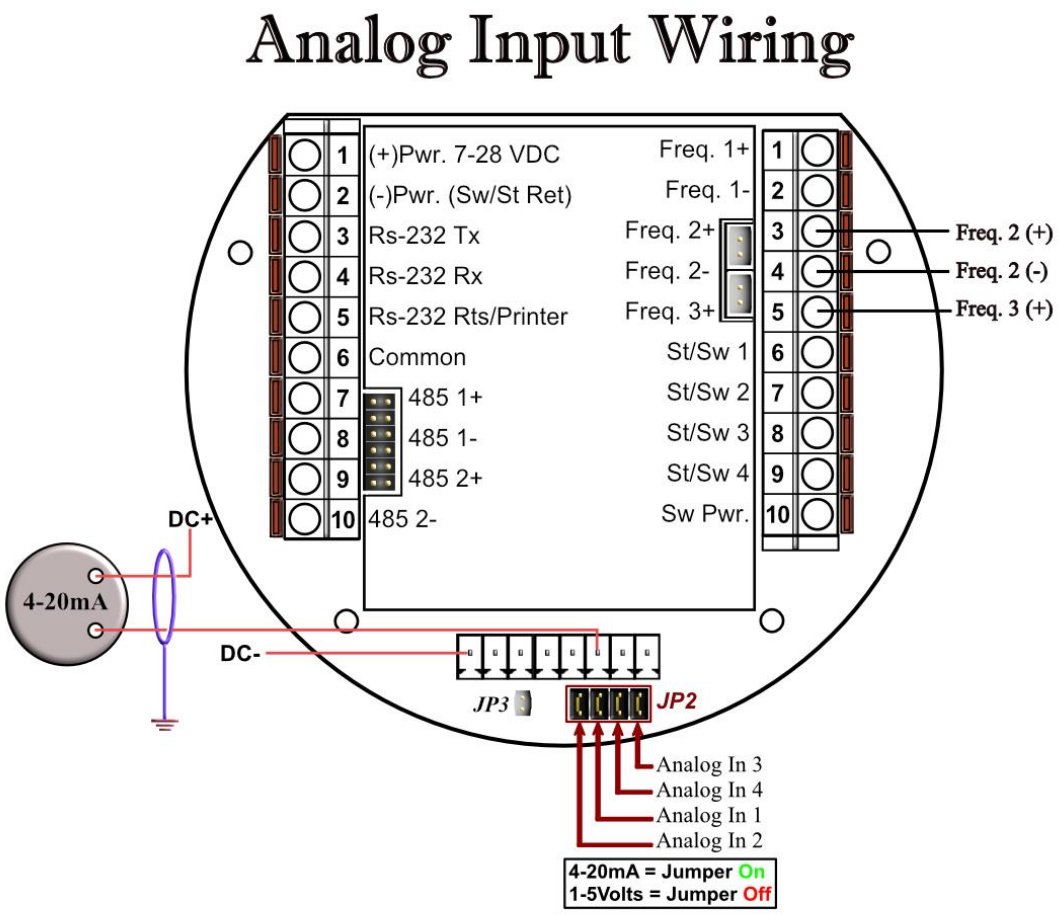

Wiring of Analog Inputs: Version 1 Board

MicroMV Board (Older MicroMV Models)

Typical wiring for analog inputs 1 and 2 are shown in the drawing. Analog inputs 3 and 4 are to the left of analog 1 and 2 separated by the RTD excitation. Note that the analog input has only one common return that is the -Ve signal of power supply powering the transmitters.

When wiring **1-5 volts**, **make sure to calibrate** the flow computer for the 1-5 volt signal because the flow computer calibration defaults for the 4-20 ma, which is different from the 1-5 volts. JP2 must be removed for 1-5 volt inputs. Signal line impedance provided by our flow computer is 250Ω.

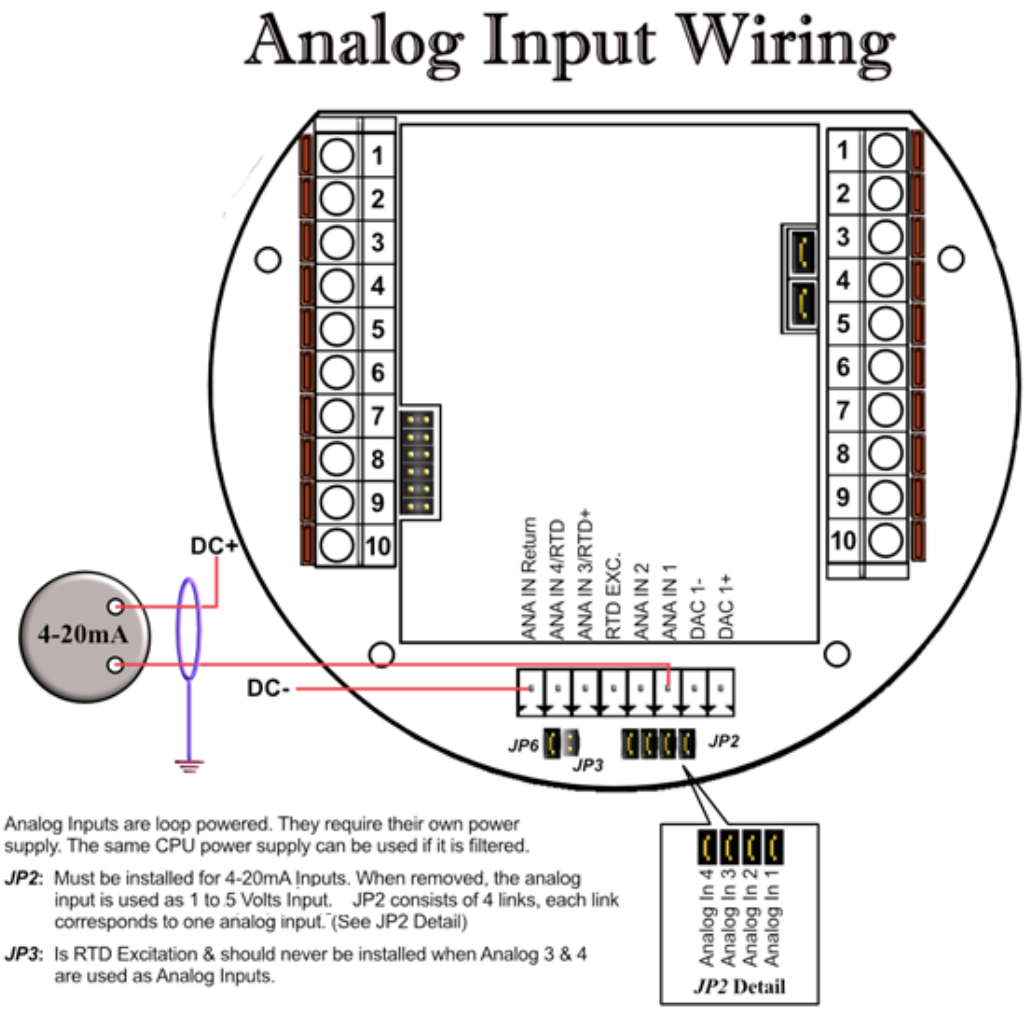

Analog Inputs are loop powered. They require their own power supply. The same CPU power supply can be used if it is filtered.

JP2: Must be installed for 4-20mA Inputs. When removed, the analog input is used as 1 to 5 Volts Input. JP2 consists of 4 links, each link corresponds to one analog input. (See JP2 Detail)

JP3: Is RTD Excitation & should never be installed when Analog 3 & 4 are used as Analog Inputs.

NOTE: The 4-20mA or 1-5 volt DOES NOT source power to the transmitters. You can use the DC power feeding the flow computer to power the 4-20mA loops IF that power supply is FILTERED.

Wiring of RTD Input

100Ω platinum **must** be used; a temperature range of -43°F to +300°F can be measured. RTD is to the left of analog in 1&2. The RTD excitation jumper (JP3) has to be installed for the RTD to function. In the figure below, notice that the RTD requires three wire connections. Internal excitation current source generated is in the micro AMP range.

Wiring RTD Directly Into CPU Board

MicroMV 2009 & Later Model

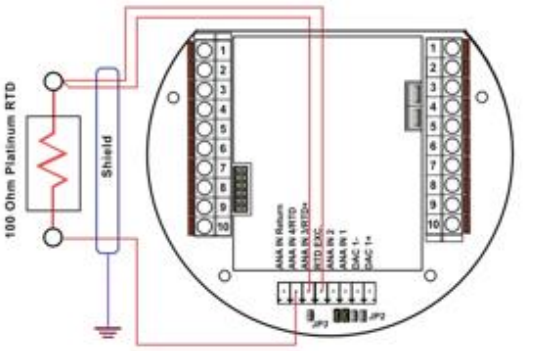

Jumper Settings:
JP3- Must be On
JP2- Two right jumpers must be Off
For 4-wire RTD, tie the two return wires together and wire as 3-wire RTD

Older MicroMV Models

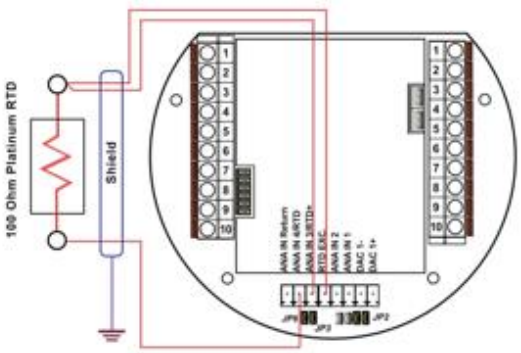

Jumper Settings:
JP3- Must be On
JP2- Two left jumpers must be Off
For 4-wire RTD, tie the two return wires together and wire as 3-wire RTD

Wiring RTD Into Rosemount Multivariable

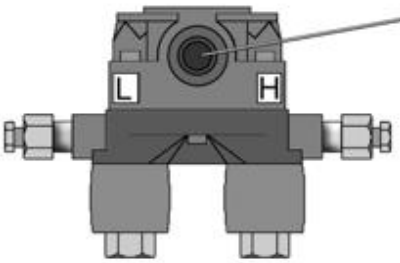

Plug the custom RTD plug into the RTD port located on the front of the multivariable sensor.

To use your own RTD instead of Rosemount's armored assembly, you can order the custom plug with wire ends.

Rosemount RTD Connection

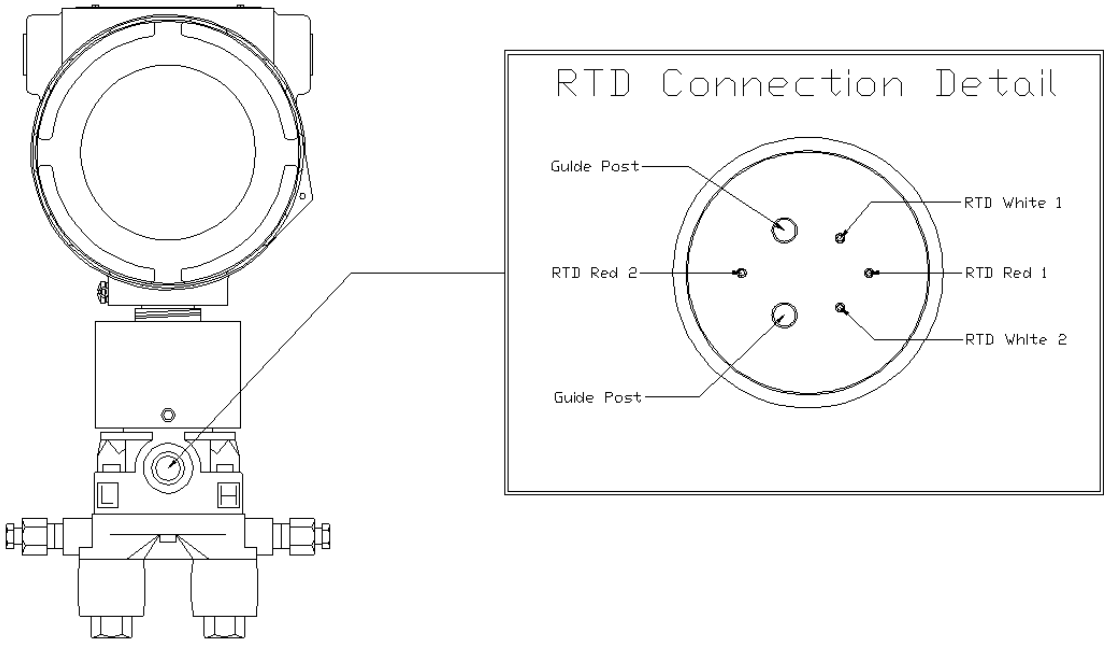

Wiring RTD Into Rosemount Multivariable

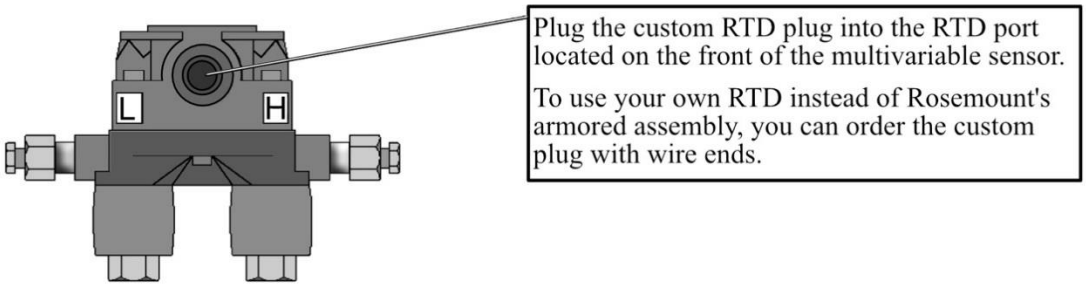

Wiring of Analog Output:

Wiring diagram shows typical Analog output wiring. Notice that analog outputs will regulate 4-20 mA current loops but DOES NOT source the power for it. External power is required.

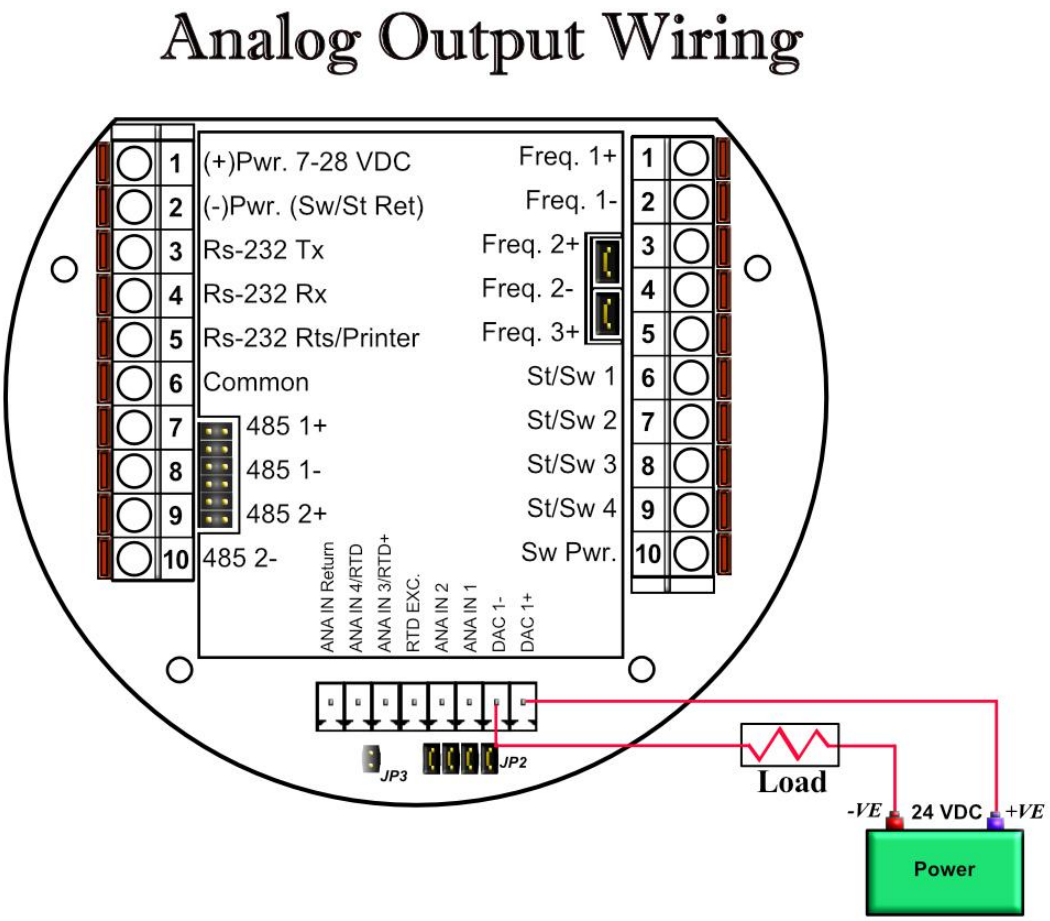

Assigning/Ranging the 4-20mA Analog Outputs:

Go to the **`I/O`** assignment main menu and click **`Analog Output Assignment`**. A selection menu is prompted. Select the analog output number, and then enter what the 4 mA output will indicate and the 20 mA. Make sure that the 20 mA assignment value exceeds the upper range limit of what you assigned the Analog output for, otherwise the analog output will not update beyond 20 mA.

Additional Analog Inputs or Analog Outputs – Board Installation

Connecting Additional Analog Board

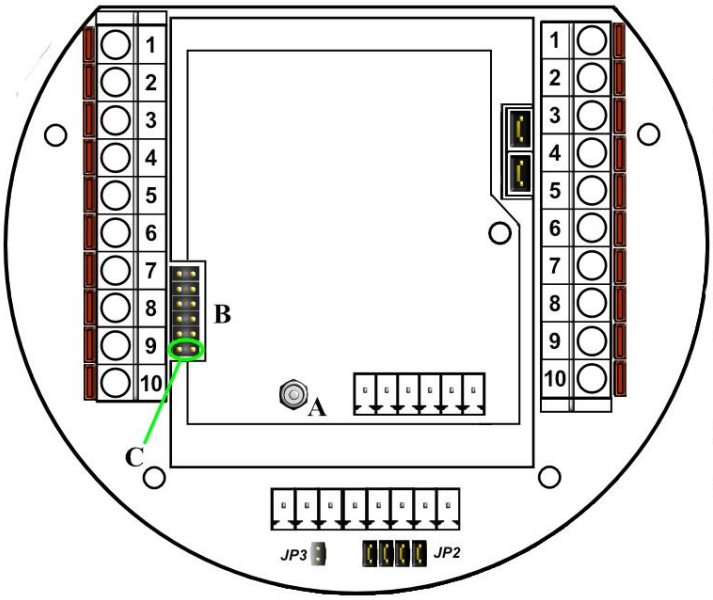

Components Needed:
- Extra Analog Board
- 1/4" Stand-off (**Figure D**)
- 1/4 Nut Screwdriver

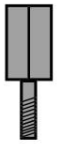

Figure D

Procedure:
1. Remove power from the Main board.
2. Remove nut from the Main Board (See **A**) and Install 1/4" Stand Off in its place.
3. Plug Analog board to the Main Board (Using Connector **B**)
4. Note that the Analog board connector has 10 pins while the Main board connector has 12 pins. The bottom two are NOT connected [See **C**].
5. Place the nut removed on step 2 on the stand-off (**A**) to secure analog board.
6. For wiring of extra Analogs, refer to specific drawing.(Analog Input/Analog Output).

Back Panel - Additional Analog Outputs

Addition analog output board is required to have additional 3 analog outputs.

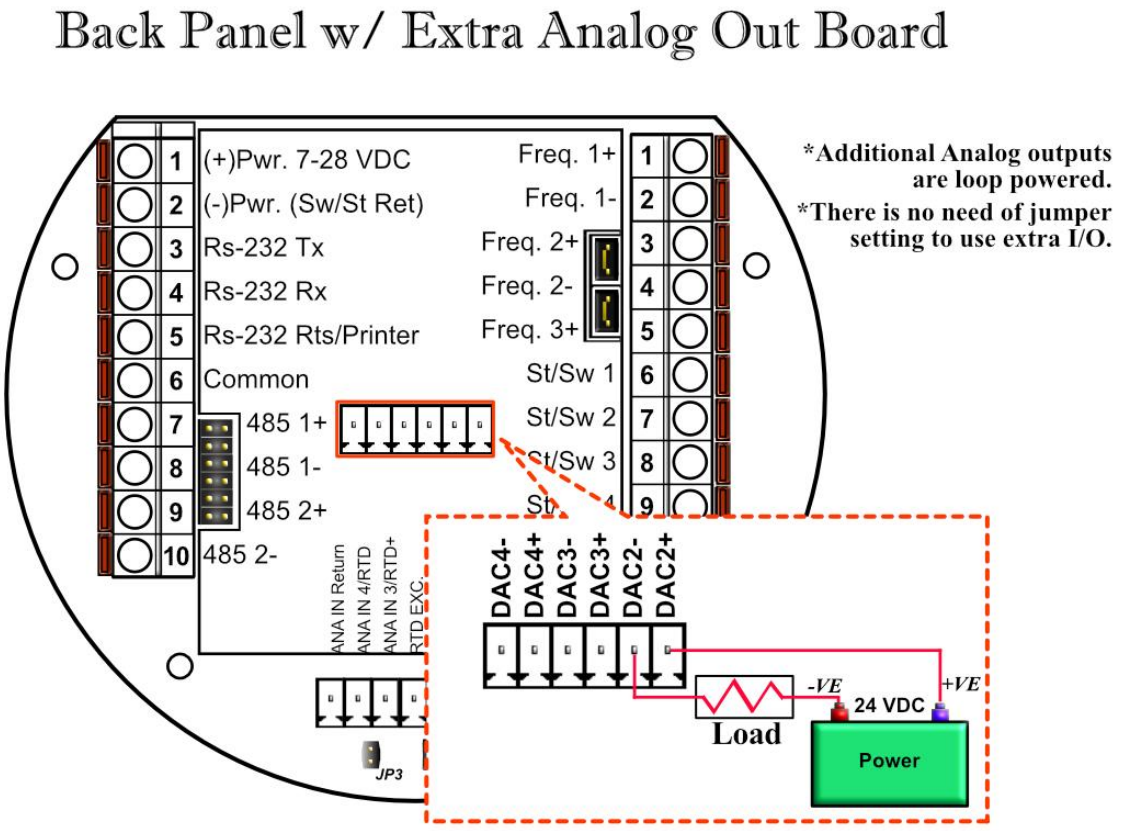

Back Panel - Additional Analog Intputs

Addition analog input board is required to have additional 5 analog inputs.

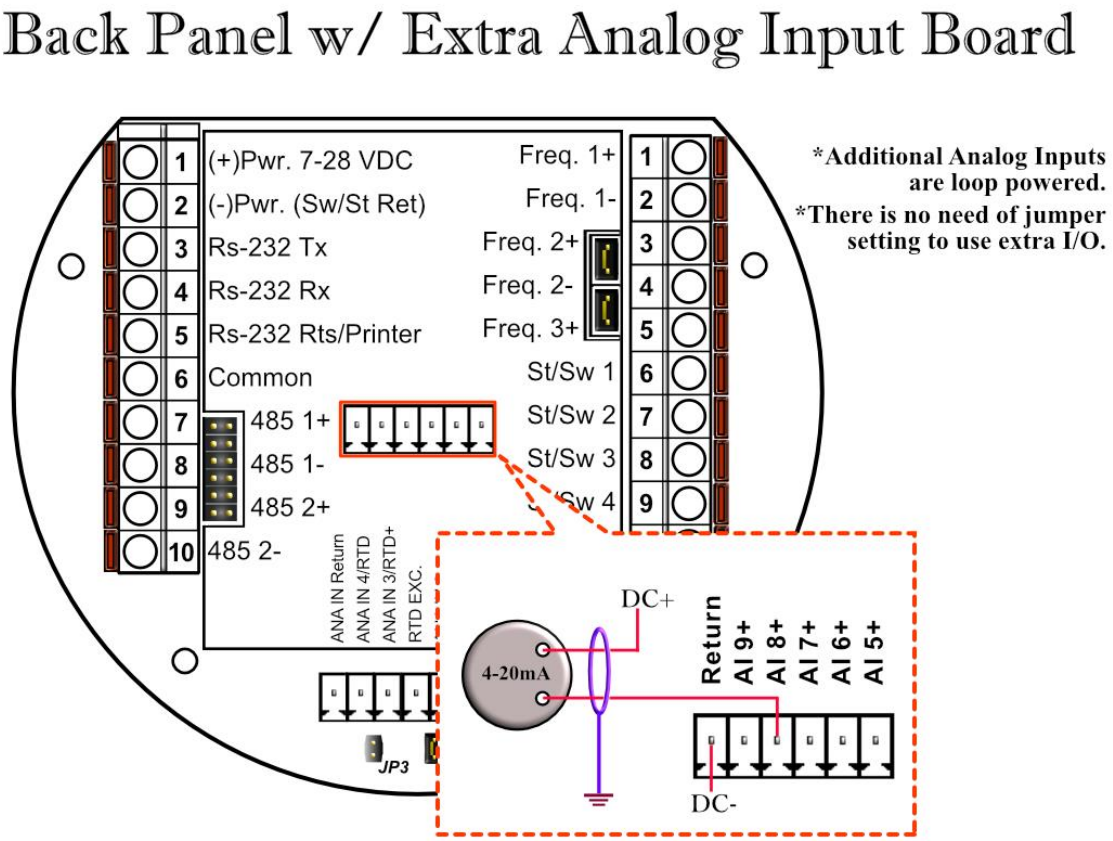

Turbine Input Wiring

Go to view main menu, click turbine under **`Wiring Drawings`**. Two drawings above each other will show typical wiring for turbine meter 1 and turbine meter 2. When connecting sine wave directly from the pickup coil make sure the distance from the pickup coil to the flow computer is very short–less than 50 feet with shielded cable. In the event there is presence of noise, the distance must be shortened. When connecting sine wave signal, the JP4 jumper for meter 1 must not be installed and JP5 jumper for meter 2 must not be installed. (***JP4 and JP5 must be off when using sine wave***). On the other hand, when using square wave, the square wave signal can be sinusoidal but has to be above 5 volts peak to peak with less than 0.4 volts offset in order for the flow computer to read it. **The JP4 jumper for meter 1 must be installed and JP5 jumper for meter 2 must be installed when using square wave.**

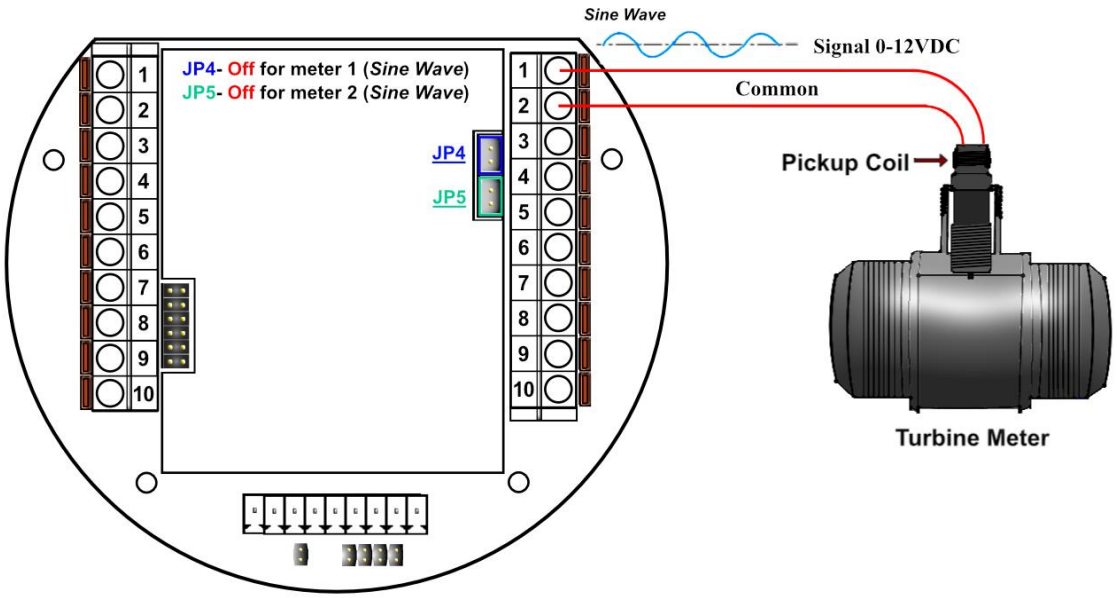

Note:	*When connecting square wave input, the JP4 and JP5 connect the turbine return to the flow computer power return. Therefore, signal polarity is very important. Reverse polarity could result in some **damage or power loss**. When sine wave is used the signal polarity is usually of no significance.*

The turbine input is on the top of terminal P3 The third pin down from the top is Turbine/PD input 2 plus and below it is Turbine 2 minus. The third frequency input (fifth pin down) has the positive input and the negative is the power input ground. If a different power supply is used to power the densitometer then the power return for that input needs to be connected to the Micro MV power ground.

Turbine Input Wiring

For square wave, the voltage is 5 to 12 VDC. Do not exceed 12 VDC
(Terminal 1-Frequency#1 input+ and Terminal 3-Frequency#2 input+).

Using Daniel 1818 Preamp

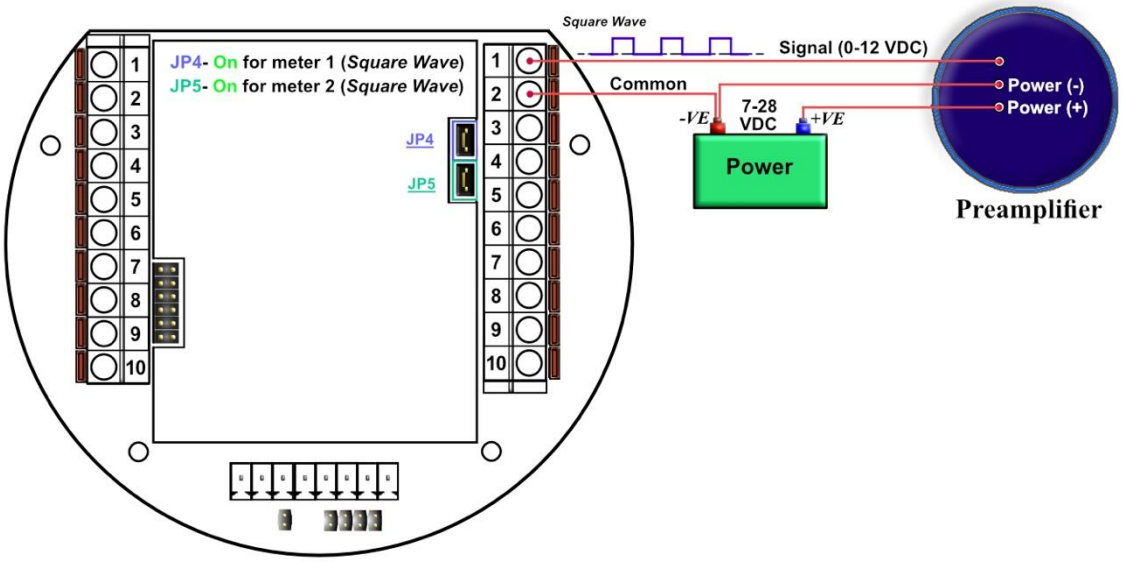

Turbine Input Wiring – Using Daniel 1817 Preamp

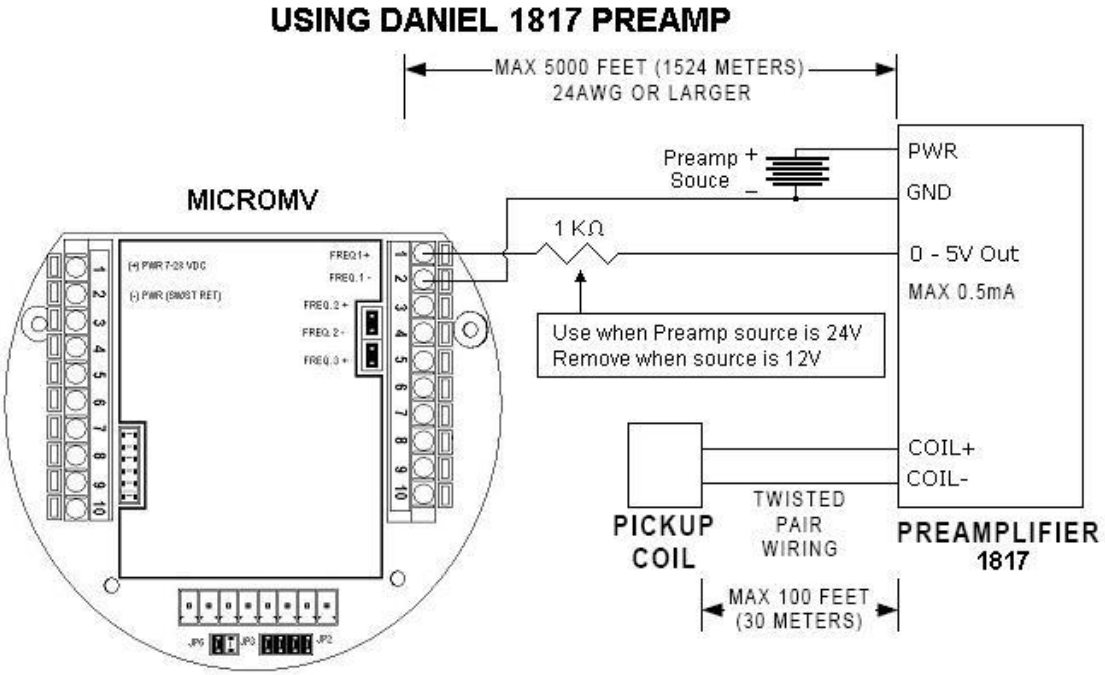

RS-232 Connection:

The RS-232 is located on the left terminal block. The third, fourth, fifth, and sixth pins of the RS232 below the power input. The RS-232 RTS pin can be used for printing reports or shares common pin with the regular RS232 port.

Note: Twisted shielded cable is required.

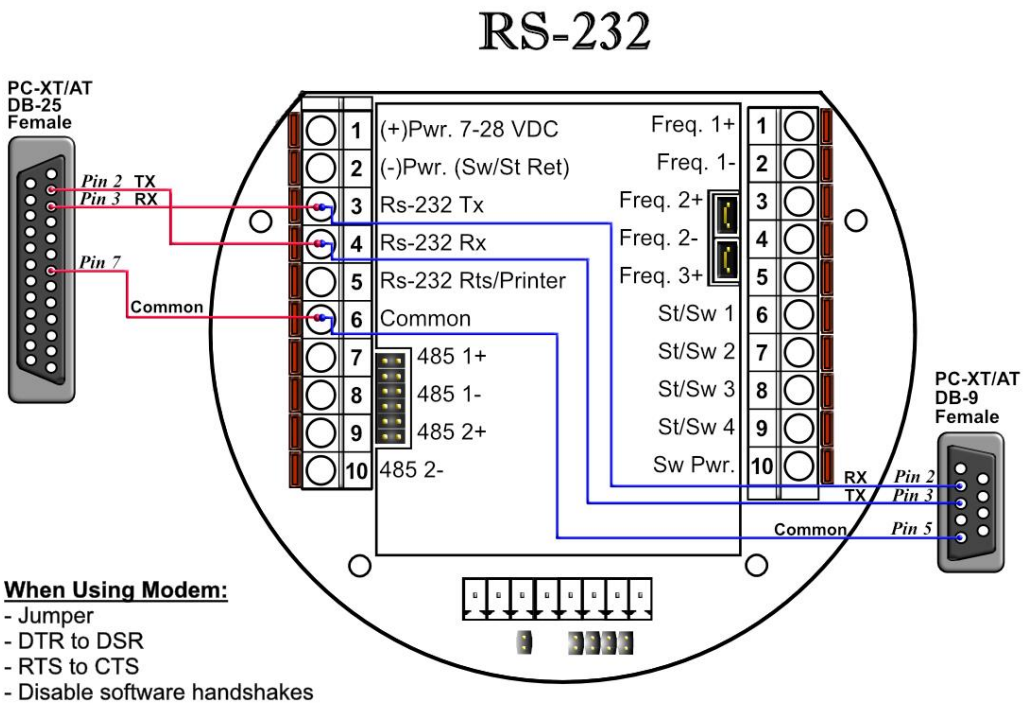

WARNING: *When the RS-232 terminal is used with a modem, external protection on the phone line is required. Jumper DTR to DSR, RTS to CTS, and disable software handshake on the modem RS232 connection*

PRINTER Connection:

When RS232/Printer pin configured as a printer line it is a TRANSMIT line (TX)

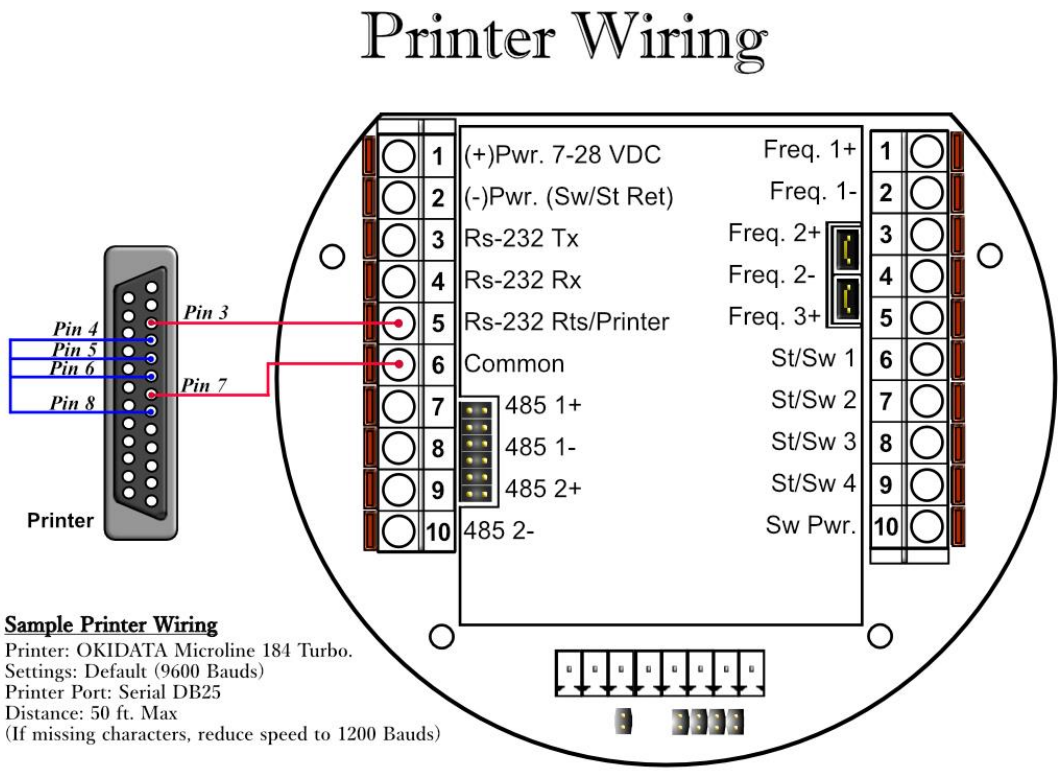

Sample Printer Wiring
Printer: OKIDATA Microline 184 Turbo.
Settings: Default (9600 Bauds)
Printer Port: Serial DB25
Distance: 50 ft. Max
(If missing characters, reduce speed to 1200 Bauds)

Avoid connecting pin 20 on DB25 if wanting to communicate flow computer to PC on the same port.
* Note 1: Jumper pins 1-4 only if not using the RS232 port for communication

RS-485 Connection

RS-485 wiring is shown in the wiring diagram under **RS-485**. Two Rs485 channels are available for Modbus communication. The second 485 channel is also available as a master to other slave devices. I.e. gas G.C., external Modbus slave devices and token passing ring. The maximum distance when 18-gauge wire is used is 4000 feet.

Note: Twisted shielded cable is required.

RS-485

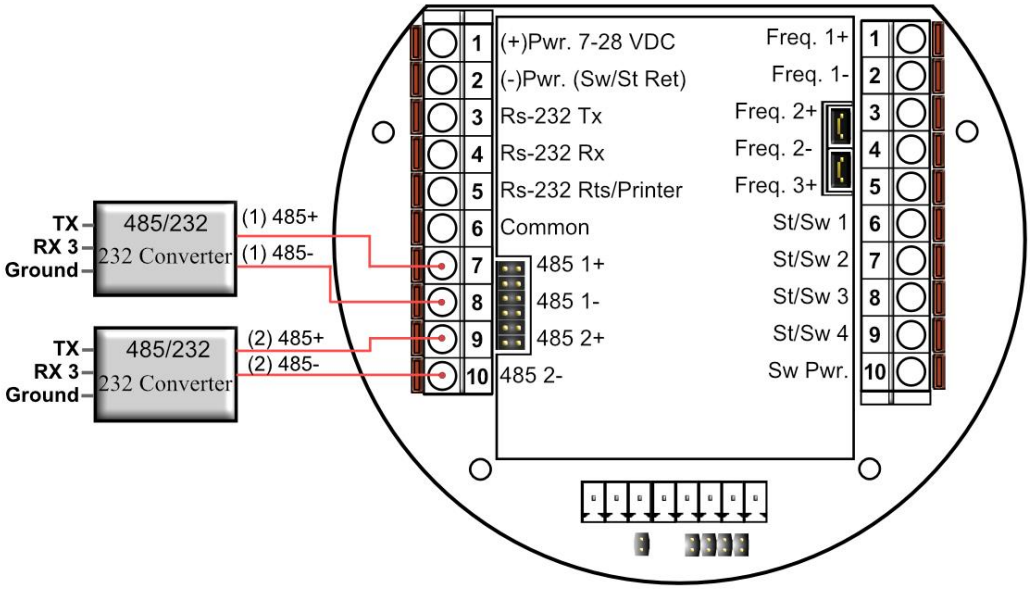

WARNING: When the RS-485 terminal is used, external transient protection and optical isolation is required, especially for long distance wiring.

RS485/232 Adapter

Dynamic recommends B&B Electronics. We generally use Model 485D9TB, which is a port power converter requiring only a 2-Wire connection. The 485D9TB has a terminal block which makes the wiring more convenient and provides the option of external 12V power for low power serial ports. Model 485SD9R can also be used, but it has a DB9 terminal which requires additional cables. With Model 485SD9R the pins that connect to the flow computer are pin 3 on the DB9 to TX on the flow computer and pin 8 on the DB9 goes to RX on the flow computer. For a USB to RS485 converter, we recommend Model USTL4 which is also port powered and supports half and full duplex networks.

***Note**

Version 1: MicroMV Board (Older MicroMV Models)

The second RS485 gets disabled if ST/SW#4 is used. They cannot be used at same time.

To use ST/SW#4 as a serial port, JP7 must be OFF and no assignment for ST/SW#4, otherwise serial port#3(Second 485 Port) gets burned if voltage is applied.

Version 2: Main/Mem MicroMV Boards (Micro2009 and Later Model)

ST/SW#4 and the second RS485 can be used be used at same time.

Wiring of Status Inputs:

There are 4 digital inputs or outputs that are user configurable. The configuration software will configure the input to be a status input or a switch output.. The standard status input has 4 volts of noise hysteresis, with on trigger point of 5 volts and an off point of 1 Volt.

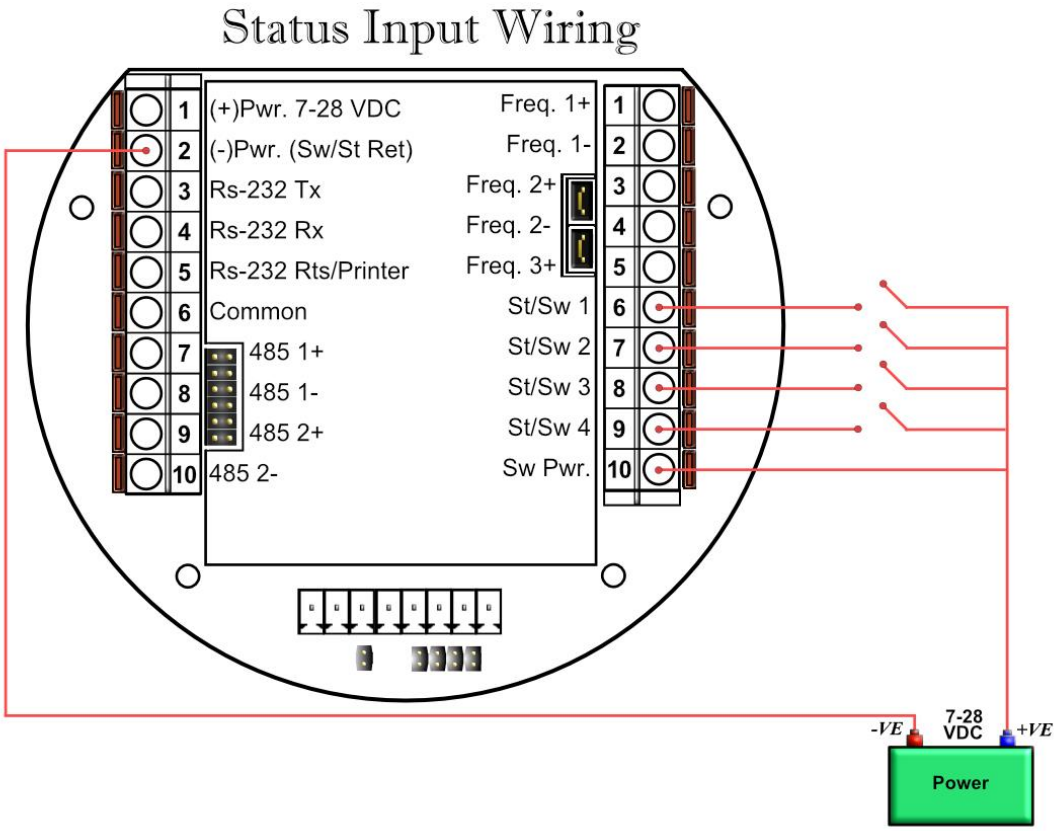

***Note**

Version 1: MicroMV Board (Older MicroMV Models)
The fourth digital I/O is optional and can only be use if the 2nd RS485 is not used.
The second RS485 gets disabled if ST/SW#4 is used. They cannot be used at same time.
To use Status 4 JP7 Must be ON otherwise OFF

Version 2: Main/Mem MicroMV Boards (Micro2009 and Later Model)
ST/SW#4 and the second RS485 can be used be used at same time.

Wiring of Switch/Pulse Outputs:

Switch one and two can be on /off or pulse type output up to 125 pulse per second. Notice that the switch outputs are transistor type outputs (open collector type with maximum DC rating of 350 mA continuous at 24 VDC) connections		
1	Status Input /switch output 1	Switch - Maximum rating: 350mA @24 volts Switch Output Range: 5-28 VDC Status Input Rating: 6-28 VDC
2	Status Input/ switch output 2	
3	Status Input /switch output 3	

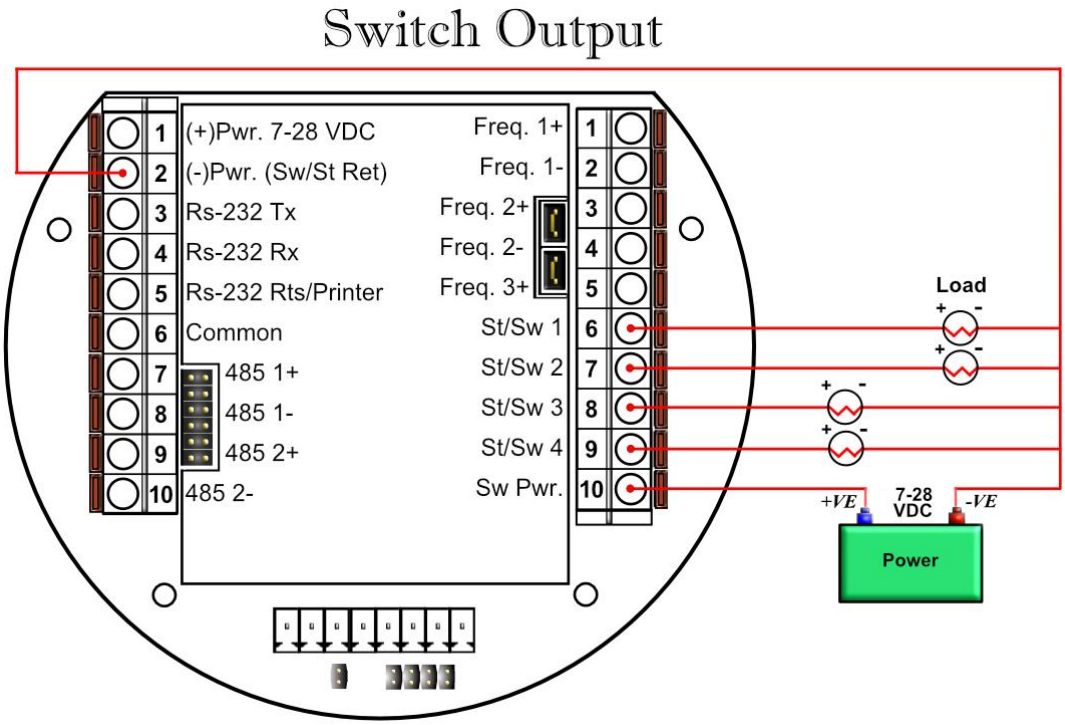

***Note**

Version 1: MicroMV Board (Older MicroMV Models)

The fourth digital I/O is optional and can only be use if the 2nd RS485 is not used.

When using ST/SW#4, the second RS485 gets disabled. They cannot be used at same time.

Version 2: Main/Mem MicroMV Boards

ST/SW#4 and the second RS485 can be used be used at same time.

Switch Output to Relay Wiring Diagram:

When wiring the Switch Outputs to an inductive load such as a relay, it is better to add transient protection to the flow computer's electronics due to the surge in voltage that inductive loads may create. This protection can be added as shown in the drawing below.

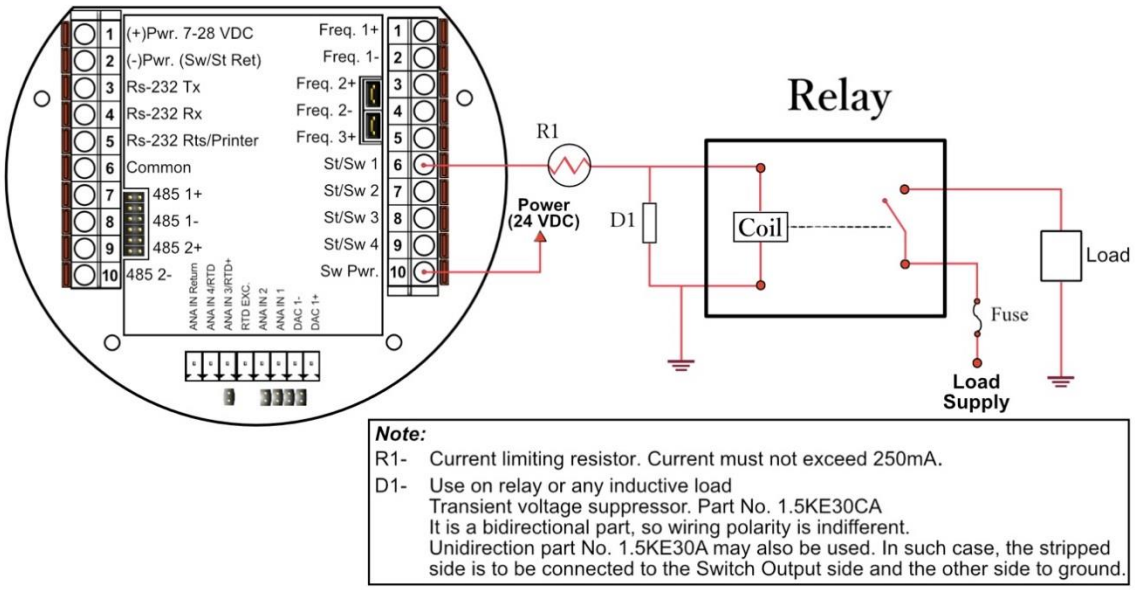

Note:

R1- Current limiting resistor. Current must not exceed 250mA.

D1- Use on relay or any inductive load
Transient voltage suppressor. Part No. 1.5KE30CA
It is a bidirectional part, so wiring polarity is indifferent.
Unidirection part No. 1.5KE30A may also be used. In such case, the stripped side is to be connected to the Switch Output side and the other side to ground.

Density Input Wiring:

When using a live densitometer input with frequency signal, the signal can be brought into the MicroMV in its raw form. The MicroMV accepts a sine wave or square with or without DC offset

.

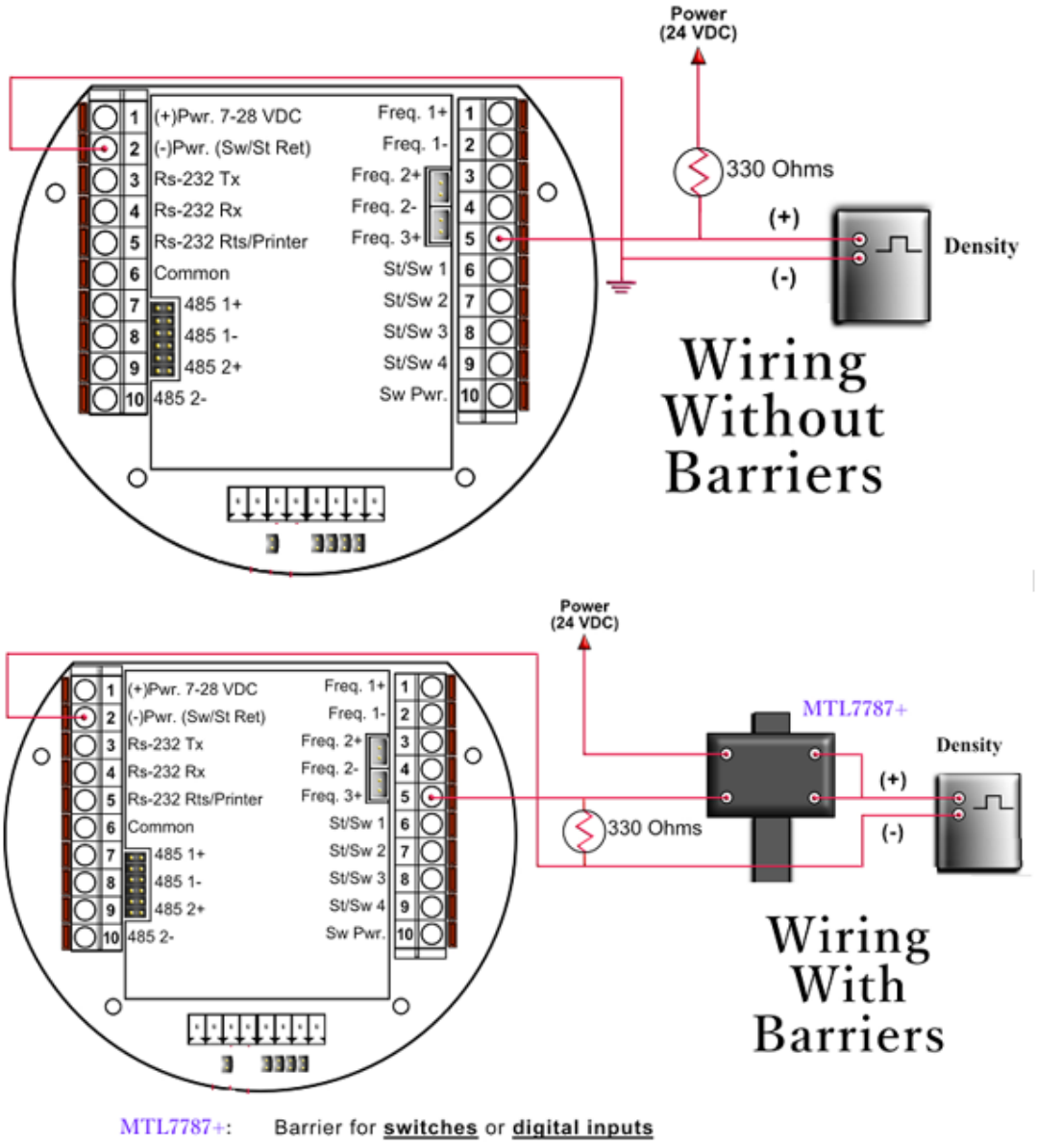

MTL7787+: Barrier for **switches** or **digital inputs**

Note:	*When wiring the density input polarity is of significance and reverse polarity could result in some damage or power loss. When Density input is 4-20mA it should be connected as a regular 4-20mA signal to the analog input and not the density frequency input.*

CALIBRATION

Calibrations are performed under **Calibration**. Select inputs to be calibrated, and then select full, single, offset calibration method.

Analog Input of 4-20mA or 1-5 volt Signal

OFFSET CALIBRATION:

For simple offset type calibration simply induce the signal into the analog input and make sure the MicroMV is reading it. After you verify that the MicroMV recognized the analog input, enter the correct mA reading, and then click OK. The offset type calibration is mainly used when a small offset adjustment needs to be changed in the full-scale reading. The offset will apply to the zero and span. Offset is the recommended method for calibrating the temperature input.

FULL CALIBRATION METHOD:

To perform full calibration be prepared to induce zero and span type signal.

1. Induce the low end signal i.e. 4mA in the analog input.
2. Click inputs to be calibrated under calibration menu, click full calibration, enter the first point - the analog input value i.e. 4mA, and then click OK button.
3. Now be ready to enter the full-scale value. Simply induce the analog signal and then enter the second value i.e. 20mA, and then click OK button
4. ***Induce live values to verify the calibration***.

TO USE DEFAULT CALIBRATION

1. Select Analog Input
2. Select Reset calibration method
3. ***Now verify the live reading against the flow computer reading***

RTD Calibration:

RTD Calibration is a 2-step process. The first step is a onetime procedure to verify transducer linearity and is done at the time the meter is being setup. The second step is the routine calibration sequence.

Step 1 – Linearity Verification

1- Use a Decade box with 0-150 °F settings.
2- Connect RTD cable to this resistive element for verification of linearity. Verify low and high points. It must be within ½ degree.
3- Connect the actual RTD element and compare with a certified thermometer.
4- If not within ½ degree do a Full Calibration (See Full Calibration below). If problem persists verify other elements such as RTD Probe, connections, shield, conductivity of connectors, etc.

The purpose of the above procedure is to verify zero and span and make sure that the two points fall within the expected tolerance.

Step 2 – Routine Calibration

Once Linearity has been verified through Step 1, the routine calibration procedure is reduced to simply connecting the actual RTD and doing an offset point calibration (see offset calibration below).

Calibration after that will be simple verification for the stability of the transmitter. If it drifts abnormally then you need to verify the other parts involved.

Calibration Procedures through Windows™ Software

At the top menu, go to Calibration and Select RTD Input.

RESET TO DEFAULT CALIBRATION
1. Select Reset calibration method
2. **Now verify the live reading against the flow computer reading**

OFFSET CALIBRATION:
1. Select offset calibration method.
2. Induce a live value and wait for 10 seconds for the reading to stabilize. Then enter the live value. The value entered must be in Ohm only.
3. **Now verify the live reading against the flow computer reading**

FULL SCALE CALIBRATION:
1. Prepare low range resistive input (i.e., 80 Ohm.) and High range resistive input (i.e., 120. Ohm).
2. Go to the calibration menu and select RTD full calibration method. Induce the low end (80 Ohm.) resistive signal and then wait 10 seconds, enter live value in Ohm, and click OK button.
3. Induce the High range signal (120 Ohm.) and wait 10 seconds, then enter 120 Ohm and click OK button.
4. **Now verify the live reading against the flow computer reading**.

Calibration of Analog Output:

Follow the following steps to calibrate the analog output against the end device

1. Go to the calibration menu, select analog output, and then select method. Full calibration will cause the flow computer to output the minimum possible signal 4 mA. Enter the live output value reading in the end device i.e. 4 mA and click OK button. Now the flow computer will output full scale 20 mA. Enter the live output i.e. 20 then click OK button.
2. ***Now verify the output against the calibration device***.

Multi-Variable Transmitters – DP and Pressure

Calibrations are performed under **Calibration**. . Select inputs to be calibrated, and then select full, single, offset calibration method.

OFFSET CALIBRATION

1. Induce live value for pressure or DP.
2. Select Multivariable DP or pressure.
3. Select offset calibration method, enter offset, and click OK button.
4. ***Now read induce live values to verify the calibration.***

FULL SCALE CALIBRATION

1. Induce live value for pressure or DP.
2. Select Multivariable DP or pressure
3. Select full calibration method
4. Induce the low range signal, enter the first point, and then click OK button.
5. Induce the high range signal, enter the second point, and then click OK button.
6. ***Now verify the live reading against the flow computer reading***.

TO USE DEFAULT CALIBRATION

1. Select Multivariable DP or pressure
2. Select Reset calibration method
3. ***Now verify the live reading against the flow computer reading***

While doing calibration before downloading any of the calibrated values, it is a good practice to verify that the Micro MV close reading to the induced value.
The DP reading must be re-calibrated for the zero offset after applying line pressure.

Multi-Variable Transmitters (Model 205) –Temperature

RTD Calibration is a 2-step process. The first step is a onetime procedure to verify transducer linearity and is done at the time the meter is being setup. The second step is the routine calibration sequence.

Step 1 – Linearity Verification

1. Use a Decade box with 0-150 °F settings.
2. Connect RTD cable to this resistive element for verification of linearity. Verify low and high points. It must be within ½ degree.
3. Connect the actual RTD element and compare with a certified thermometer.
4. If not within ½ degree do a Full Calibration (See Full Calibration below). If problem persists verify other elements such as RTD Probe, connections, shield, conductivity of connectors, etc.

The purpose of the above procedure is to verify zero and span and make sure that the two points fall within the expected tolerance.

Step 2 – Routine Calibration

Once Linearity has been verified through Step 1, the routine calibration procedure is reduced to simply connecting the actual RTD and doing an offset point calibration (see offset calibration below).

Calibration after that will be simple verification for the stability of the transmitter. If it drifts abnormally then you need to verify the other parts involved.

Calibration Procedures through Windows™ Software

At the top menu, go to Calibration and Select RTD Input.

RESET TO DEFAULT CALIBRATION
1. Select Reset calibration method
2. **Now verify the live reading against the flow computer reading**

OFFSET CALIBRATION:
1. Select offset calibration method.
2. Induce a live value and wait for 10 seconds for the reading to stabilize. Then enter the live value. The value entered must be in Degrees only.
3. **Now verify the live reading against the flow computer reading**

FULL SCALE CALIBRATION:
1. Prepare low range resistive input (i.e., 80 Ohm.) and High range resistive input (i.e., 120. Ohm).
2. Go to the calibration menu and select RTD full calibration method. Induce the low end (80 Ohm.) resistive signal and then wait 10 seconds, enter the equivalent temperature in degrees, and click OK button.
3. Induce the High range signal (120 Ohm.) and wait 10 seconds, then enter the temperature degrees equivalent to 120 Ohm and click OK button.
4. **Now verify the live reading against the flow computer reading**.

Example: Screenshots of Full Calibration (*Assumption: not flowing*)

Diagnostics

I/O Raw Values

Unit ID: 1 Frequency 1: 0 Frequency 2: 0 Densit. Frequency: 0

Switch Output Diagnostic: OFF Enable/Disable Diagnostic

ST/SW 1: OFF ST/SW 2: OFF ST/SW3: OFF ST/SW4: OFF

Analog In	Tag ID	4-20 mA	Live Value	Numerical	Fail Code	
1	AIN1	0.011	0	0	0	Calibrate
2	AIN2	0.011	0	0	0	Calibrate
3	AIN3	0.011	0	0	0	Calibrate
4	AIN4	0.01	0	0	0	Calibrate
5	N/A	0.000	0	0	0	Calibrate
6	N/A	0.000	0	0	0	Calibrate
7	N/A	0.000	0	0	0	Calibrate
8	N/A	0.000	0	0	0	Calibrate
9	N/A	0.000	0	0	0	Calibrate
RTD	N/A	0.551	-401.4	-401.4	0	Calibrate

Analog Out	Tag ID	Assigment	4-20 mA	Value	
1	N/A	None	4	0	Calibrate
2	N/A	None	4	0	Calibrate
3	N/A	None	4	0	Calibrate
4	N/A	None	4	0	Calibrate

Multivariable	Tag	Value	
DP	MDP	-0.412	Calibrate
Pressure	MPF	-1.26	Calibrate
Temperature	MTF	70	Calibrate

Multivariable Connection: OK

Battery Voltage: 7.2

Select Reset Calibration – Return calibration to manufacturer default DP value

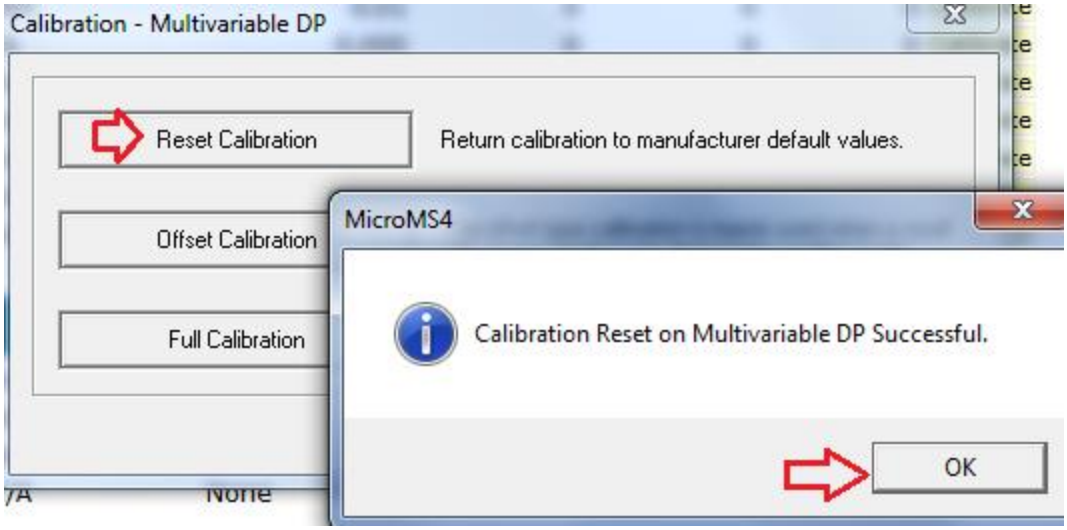

Select Full Calibration - To configure zero and span values of the signal

Induce the low range signal, enter the first point, and then click OK button.

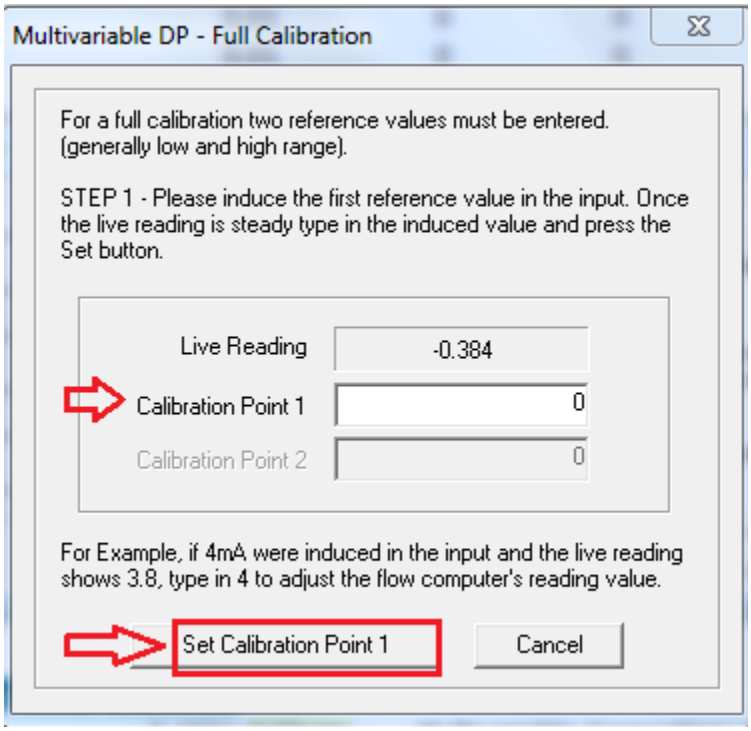

Induce the high range signal, enter the second point, and then click OK button.

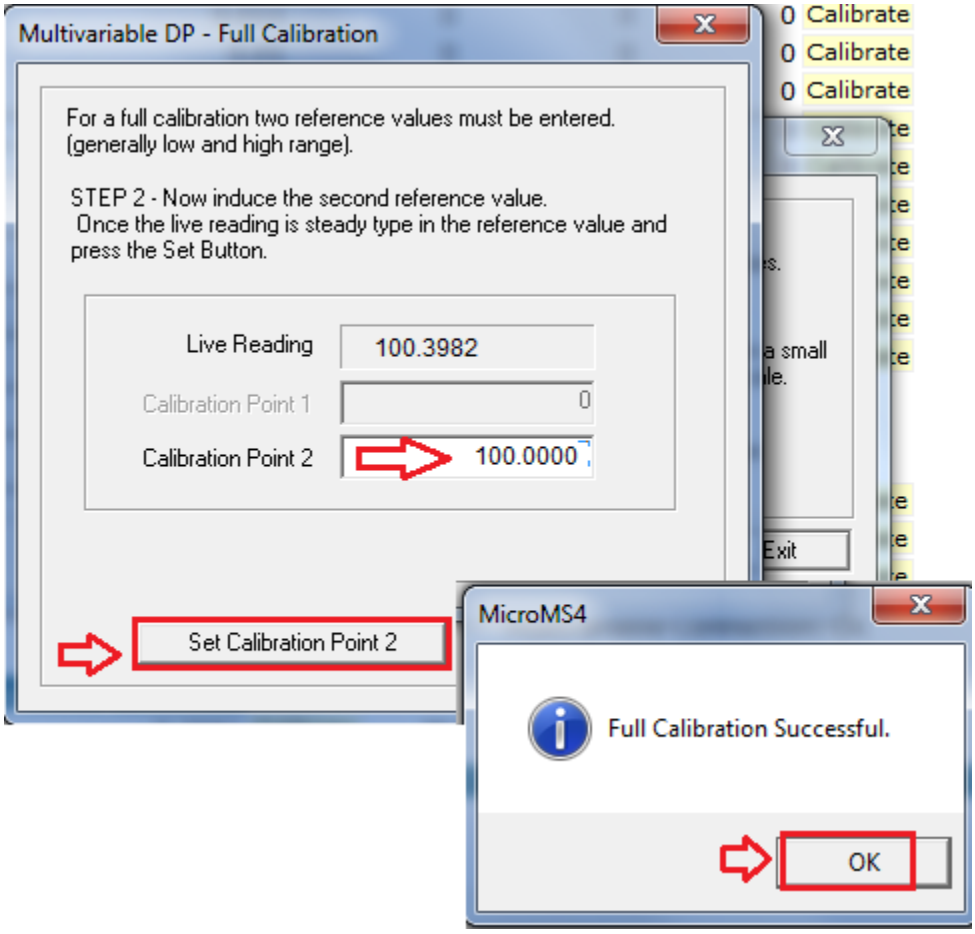

Now verify the live reading against the flow computer reading.

Display Calibration

To adjust display contrast, touch screen buttons sensitivity, or change display back light settings.

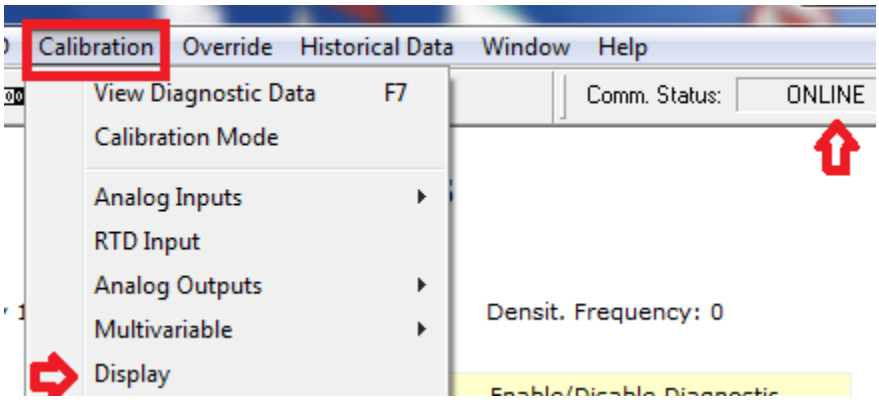

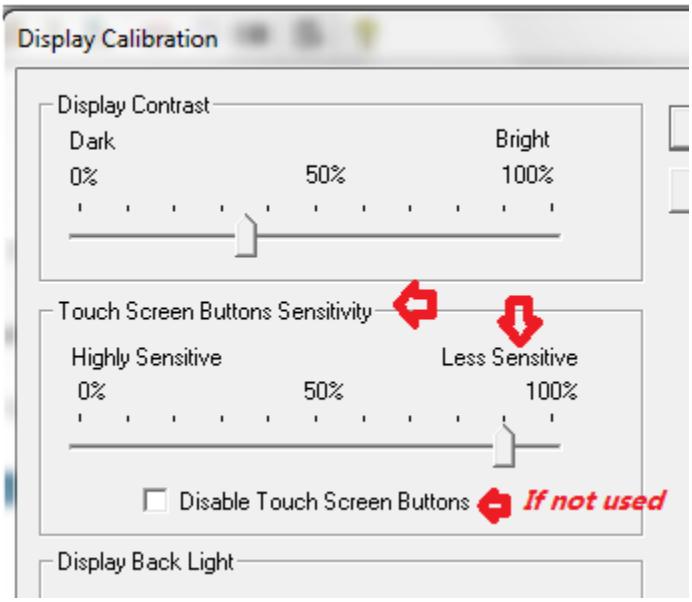

Verifying Digital Inputs and Outputs

Use the diagnostic menu. to verify all inputs and outputs. A live input and output is displayed. On the top of the screen pulse inputs and density frequency input are shown. Compare the live value against the displayed value on the screen. Failure to read turbine input could be a result of a bad preamplifier or the jumper selection for sine and square wave input are not in the correct position. Refer to wiring diagram **`Wiring | Turbine`** for proper turbine input wiring. Density input can be sine or square wave with or without DC offset. Minimum accepted signal has to be greater than 1.2 volt peak to peak. Status input is shown below the frequency input to the left of the screen. When the status input is on, the live diagnostic data will show **`ON`**. Minimum voltage to activate the status is 6 volts with negative threshold of 2 volts. To activate the switch outputs to the on and off position, click on "Enable/Disable Diagnostic" button in the diagnostic menu. After the screen freeze, click on "Toggle ON/OFF" button to toggle the switch on/off . To exit, click on "Enable/Disable Diagnostic" button again. The switch outputs are open collector and require external voltage.

CHAPTER 2: Data Entry and Configuration Menus

Introduction to the MicroMVL Software

The Micro MV Liquid software is constructed around a menu-driven organization

Configuration File through Window Program

New

Create a new file to store all the programmed information for one Micro MV Liquid Flow Computer. After a file is opened it becomes the currently active file, its contents can be viewed and its parameters can be edited.

Open

Use this function to open an existing configuration file. After a file is opened it becomes the currently active file, its contents can be viewed and its parameters can be edited. When this function is chosen a list of existing configuration files is displayed. Select the file to be opened.

Close

Close or exit configuration file.

Save

When permanent modifications are performed on a file, user must save the new changes before exiting the program, or proceeding to open a different file.

Save As

Use Save As to save the parameters in the currently active file (that is, the parameter values currently being edited) to a new file. The original file will remain in memory.

VIEW

View Drawings

Select the wiring diagram to be displayed. (See details in chapter 1)

- Back Panel
- Analog Input
- RTD
- Analog Output
- Status Input
- Switch Output
- Turbine
- Densitometer
- RS 232
- RS 485

TOOLS

Com Port Settings

SERIAL PARAMETERS

Communication Port Number

Enter the PC port used to communicate with the Micro MV Liquid Flow Computer.

Baud Rate

> *Note: this parameter must be set the same for both the PC and the Micro MV Liquid Flow Computer for communication to occur.*

Baud rate is defined as number of bits per second. The available selections are 1200, 2400, 4800, 9600, or 19200.

Parity

> *Note: this parameter must be set the same for both the PC and the Micro MV Liquid Flow Computer for communication to occur.*

RTU - NONE
ASCII - EVEN or ODD

Set the parity to match the **`Modbus Type`**.

Data Bits

Options available: 5, 6, 7, or 8. Generally used: 8 for RTU mod, 7 for ASCII mode.

Stop Bits

Options available: 1, 1.5,or28. Generally used: 1.

Modbus Type

> *Note: this parameter must be set the same for both the PC and the Micro MV Liquid Flow Computer for communication to occur.*

The Modbus Communication Specification is either Binary RTU or ASCII.

Auto Detect Settings

Click this button and the configuration program will attempt to communicate with a single Micro MV Liquid Flow Computer at different baud rates and formats.
Failure to communicate can occur because of a wiring problem, wrong PC port selection, communication parameter mismatch between PC and Micro MV Liquid Flow Computer (Modbus type, parity, baud rate, etc.) or lack of power to the Micro MV Liquid Flow Computer. To use this feature, the user must insure that only one Micro MV Liquid Flow Computer is connected to the PC. More than one Micro MV Liquid Flow Computer in the loop will cause data collisions and unintelligible responses

Flow Control

RTS Flow Control

Turns the RTS flow control on and off. The Enable option turns ON the RTS line during the connection. The Handshake option turns on RTS handshaking. Disable turns OFF the RTS line. Toggle specifies that the RTS line is high if bytes are available for transmission. After all buffered bytes have been sent the RTS line will be low.

DTR Flow Control

Specifies the DTR flow control. Enable turns ON the DTR line during the connection. Handshake turns on DTR handshaking. Disable turns off the DTR line.

CST Flow Control

Turns the CTS flow control on and off. To use RTS/CTS flow control, specify Enable for this option and Handshake control for the RTS option.

USE INTERNET PROTOCOL

Check the box if you are planning to communicate using an Ethernet connection instead of a serial connection.

IP Address

IP Address of the target Flow Computer. This address must follow the addressing standard xxx.xxx.xxx.xxx. You must provide both IP Address and Port in order to communicate with a flow computer.

Port

In conjunction with the IP Address, a port number must be specified. The default port number for Modbus/Ethernet bridges is 502 but it can be any number.

Protocol

Protocol to be used through the Ethernet connection. Modbus TCP, also known as Modbus Ethernet consists of a Modbus message without CRC wrapped by a TCP/IP message. This protocol is generally used by industrial Modbus to Ethernet converters. The TCP/IP encapsulation also known as TCP/IP Pass Through Mode consists of a regular Modbus message embedded in a TCP/IP message. This protocol is generally used by general purpose Ethernet to Serial converters.

UNIT ID NUMBER

The Unit ID Number is used strictly for communication purposes; it can take any value from 1 to 247. Only one master can exist in each loop.

> *Note: Do not duplicate the Unit ID number in a single communication loop! This situation will lead to response collisions and inhibit communications to units with duplicate ID numbers.*

TIME OUT

The amount of time in seconds the program will wait for an answer from the flow computer.

RETRY TIMES

Retry times for the program to communicate with the flow computer in case of timeout.

.

Meter Configuration

METER DATA

Meter ID

Up to 8 characters. This function will serve as meter tag.

Flow Equation Type (1-6)

1 = API 14.3 (NEW AGA3)
2 = Wedge
3 = Venturi
4 = Frequency Device
5 = V-Cone
6 = VenCone

Select the desired calculation mode. API 14.3 is the latest orifice calculations introduced in 1994 All new installations are recommended to use API 14.3 for orifice calculations.

Flow Rate Low/High Limit

The high/low flow rate alarm is activated, when net flow rate exceeds or is below the set limit. The alarm will be documented with time, date, and totalizer.

Volume Units

Select desired units 0=BBL, 1=GAL, 2=CF, or 3=MCF. The Micro MV Liquid Flow Computer will perform the proper conversion routine from barrels to gallons to cubic feet.

Water Salinity Factor

Water salinity factor is controlled by the amount of salt in water. Typical value would be around 1.2. The salinity value affect water correction factor for the net calculations.

Mass Units (Available for version 11.00.00 or later)

Selection	Description
0	MLB
1	LB

API 14.3 DATA (NEW AGA3)

To set API 14.3 flow parameters, set **`Flow Equation Type = 1`**, and click "eq. settings" button. You will then access a submenu in which you can set the parameters below.

Pipe I.D. Inches

Orifice ID Inches

Pipe ID in inches is the measured inside pipe diameter to 5 decimals at reference conditions. Orifice ID in inches is the measured diameter of the orifice at reference conditions.

DP Cut off

The Micro MV Liquid Flow Computer suspends all calculations whenever the DP, in inches of water column, is less than this value. This function is vital for suppressing extraneous data when the DP transmitter drifts around the zero mark under no-flow conditions.

Y Factor (0=None,1=Upstream,2=Downstream)

Y factor is the expansion factor through the orifice. The user must enter the position of the pressure and temperature sensors. Select y=1 if the sensors are installed upstream of the orifice plate. Select y=2 if the sensors are down stream of the orifice plate.

Isentropic Exponent (Specific Heat)

Ratio of specific heat is a constant associated with each product. Even though it varies slightly with temperature and pressure, in most cases it is assumed as a constant.

Viscosity in Centipoise

Viscosity is entered in centipoise even though viscosity will shift with temperature and pressure; the effect on the calculations is negligent. Therefore using a single value is appropriate in most cases.

Reference Temperature of Orifice

Reference temperature of orifice is the temperature at which the orifice bore internal diameter was measured. Commonly 68 °F is used.

Orifice Thermal Expansion Coeff. E-6

Orifice thermal expansion is the linear expansion coefficient of orifice material.

Type 304 and 316 Stainless	9.25 E-6
Monel	7.95 E-6
Carbon Steel	6.20 E-6

Reference Temperature of Pipe

Reference temperature of pipe is the temperature at which the pipe bore internal diameter was measured. Commonly 68 °F is used.

Pipe Thermal Expansion Coeff. E-6

Pipe thermal expansion is the linear expansion coefficient of pipe material.

Type 304 and 316 Stainless	9.25 E-6
Monel	7.95 E-6
Carbon Steel	6.20 E-6

WEDGE METER DATA

To set Wedge meter flow parameters, | **`Flow Equation Type = 2,`** and click "eq. settings" button. You will then access a submenu in which you can set the parameters below.

DP Cutoff

The Micro MV Liquid Flow Computer suspends all calculations whenever the DP, in inches of water column, is less than this value. This function is vital for suppressing extraneous data when the DP transmitter drifts around the zero mark under no-flow conditions.

Flow Coeff Kd2 and Expansion Factor Fa

$$\textbf{Flow Rate (GPM)} = (5.668 \, x \, F_a \, x \, K_{d2}) \times \sqrt{\frac{DP}{SG}}$$

$\textbf{DP}$ = *differential pressure,inches of water*

$\textbf{SG}$ = *liquid specific gravity at flow conditions*

$\textbf{F}_\textbf{a}$ = *Expansion coefficient of wedge*

$\textbf{K}_\textbf{d2}$ = *Discharge coefficient of wedge*

VENTURI DATA

To set Venturi flow parameters, set **Meter Data | Flow Equation Type = 3,** and click "eq. settings" button. You will then access a submenu in which you can set the parameters below.

Pipe I.D. Inches

Pipe ID in inches is the measured inside pipe diameter to 5 decimals at reference conditions.

Orifice ID Inches

Orifice ID in inches is the measured diameter of the Venturi throat.

DP Cutoff

The Micro MV Liquid Flow Computer suspends all calculations whenever the DP, in inches of water column, is less than this value. This function is vital for suppressing extraneous data when the DP transmitter drifts around the zero mark under no-flow conditions.

Y Factor (0=None,1=Upstream,2=Downstream)

Y factor is the expansion factor through the Venturi. The user must enter the position of the pressure and temperature sensors. Select y=1 if the sensors are installed upstream of the Venturi. Select y=2 if the sensors are down stream of the Venturi.

Isentropic Exponent (Specific Heat)

Ratio of specific heat is a constant associated with each product. Even though it varies slightly with temperature and pressure, in most cases it is assumed as a constant.

Reference Temperature of Orifice

Reference temperature of orifice is the temperature at which the orifice bore internal diameter was measured. Commonly 68 °F is used.

Orifice Thermal Expansion Coeff. E-6

Orifice thermal expansion is the linear expansion coefficient of Venturi throat material.

Type 304 and 316 Stainless	9.25 E-6
Monel	7.95 E-6
Carbon Steel	6.20 E-6

Pipe Thermal Expansion Coeff. E-6

Pipe thermal expansion is the linear expansion coefficient of pipe material.

Type 304 and 316 Stainless	9.25 E-6
Monel	7.95 E-6
Carbon Steel	6.20 E-6

Discharge Coefficient C

This value is the discharge coefficient for Venturi flow equations. The default value is 0.9950.

FREQUENCY DEVICE DATA

To set frequency device flow parameters, set **Meter Data | Flow Equation Type = 4** and click "eq. settings" button You will then access a submenu in which you can set the parameters below.

K Factor

K Factor is the number of pulses per unit, i.e. 1000 pulses/Unit. The meter's tag would normally indicate the K Factor.

Volume Pulse Input - K Factor is the number of pulse per unit volume
Volume unit selection – BBL, GAL, CF, or MCF
Mass Pulse Input – K Factor pulses/LB

Meter Factor

Meter Factor is a correction to the K Factor for this individual meter, applied multiplicatively to the K factor.

Flow Cutoff Frequency (0-99)

The Micro MV Liquid Flow Computer will quit totalizing, when frequency is below the set limit. This feature is to reduce extraneous noise appearing as data when the meter is down for period of time. The totalizer will stop totalizing when the turbine frequency is below the limit.

Mass Pulse

Enter '1' to select mass pulse input in LB.

Retroactive Meter Factor

If zero is selected, the meter factor will not apply to the entire batch. It will only apply from the time the new meter factor is entered. Retroactive meter factor, on the other hand, will apply to the entire batch and the entire batch is re-calculated, using the new meter factor.

Gross Include Meter Factor

Enter '1' to include meter factor in gross flow.

Linear Factor

Enter the different correction factors for the meter at different flow rates. The flow computer will perform linear interpolation. Notice that even though using this feature to enhance the measurement accuracy, performing audit trail on a linearized meter factor is very difficult.

CONE/SMART CONE DATA

Flow Equation Type = 5

Meter I.D.

Cone ID

Meter ID in inches is the measured inside pipe diameter at reference conditions. Cone ID is the measured diameter of the Cone at reference conditions.

DP Cutoff

The Micro MV Liquid Flow Computer suspends flow rate calculations whenever the DP, in inches of water column, is less than this value. This function is vital for suppressing extraneous data when the DP transmitter drifts around the zero mark under no-flow conditions.

Y Factor

Selection	Description
0	Non-Compressible Fluids
1	Compressible Fluids – Precision Tube
2	Compressible Fluids – Wafer and Cone

Isentropic Exponent (Specific Heat)

Ratio of specific heat is a constant associated with each product. Even though it varies slightly with temperature and pressure, in all cases it is assumed as a constant.

Flow Coefficient

Enter flow coefficient of the meter.

Pipe Thermal Expansion Coefficient E-6

Pipe material coefficient of thermal expansion.
Note: *the value is typically between 5.0e-6 and 10.0e-6.*

Cone Thermal Expansion Coefficient E-6

Cone material coefficient of thermal expansion.
Note: *the value is typically between 5.0e-6 and 10.0e-6.*

VENCONE DATA

Flow Equation Type = 6

Pipe I.D.

Cone ID

Pipe ID in inches (us unit), or in millimeter (metric unit) is the measured inside pipe diameter at reference conditions. Cone ID is the measured diameter of the orifice at reference conditions.

DP Cutoff

The EPLUS Flow Computer suspends flow rate calculations whenever the DP, in inches of water column (us unit) or in mbar or in KPA (metric unit), is less than this value. This function is vital for suppressing extraneous data when the DP transmitter drifts around the zero mark under no-flow conditions.

Y Factor

Selection	Description
0	Non-Compressible
1	Compressible Fluids

Isentropic Exponent (Specific Heat)

Ratio of specific heat is a constant associated with each product. Even though it varies slightly with temperature and pressure, in all cases it is assumed as a constant.

Outflow Coefficient

Enter outflow coefficient under standard status.

Pipe and Cone Thermal Expansion Coefficient E-6

Enter the Pipe and cone material coefficient of thermal expansion.
Note: *the value is typically between 5.0e-6 and 10.0e-6.*

OTHER PARAMETERS

Company Name

Up to 20 characters. The company name appears in the reports.

Meter Location

Up to 20 characters. This entry appears only in the report and serves no other function.

Day Start Hour (0-23)

Day start hour is used for batch operation. If daily batch is selected, the batch will end at day start hour, all batch totalizers and flow-weighted values are reset.

Disable Alarms

Use Disable Alarms to ignore alarms. When the alarm function is disabled alarms are not logged. Alarms are also not logged if the DP is below the cut-off limit.

Battery Voltage Reading

Enable this feature to read battery voltage. The battery alarm low is activated, when the voltage is below 11.2 volts. Old CPU boards do not have this feature. Uncheck the box to disable battery low alarm.

Common Parameters

This feature allows the Flow Computer to use the transmitters on meter one to substitute and compensate for meter two.

Atmospheric Pressure

This pressure is local pressure or contracted atmospheric pressure. (i.e. 14.73 PSI).

Select Scale Value

Scale value **uses high limit parameters**. Full-scale value can be selected using 32767 or 4095.

Example:
Current meter#1 temperature reading is 80 Degree F

Select Scale Value Data Entry	32767	4095
Meter#1 Temperature High Limit Data Entry	32767	4095
Value of Modbus Register <3059>	80	80

Meter Bank

Single or two meters run configuration per individual Micro MV Liquid Flow Computer. Enter '1', if two meters are connected to the flow computer.

Bi-Directional

This feature allows a status input to give direction for meter one and two, just meter one, meter two. Bi-directional totalizers will totalize accordingly.

Stream Selection

Single stream can be single meter or bank of two meters. Dual streams allow the user to monitor independent products on separate streams simultaneously.

Station Total

Station total can add meter one and two, subtract meter one from meter two, or just ignore this feature by selecting none. Station Total does not affect, destroy or otherwise alter the data from either meter. When Station Total is other than none, an additional data parameter, Station Total, is generated by the Micro MV Liquid Flow Computer and appears in reports and on the live display monitor.

Select Flow Rate Display

The flow rate will be based on daily basis, hourly, or minute.

Flow Rate Average Second

The flow rate is averaged for 1-10 seconds to minimize fluctuating flow rate conditions. This number averages the current flow rate by adding it to the previous seconds' flow rate, and then displays an averaged smoothed number. Only a low-resolution pulse meter requires this function.

Print Intervals in Minutes (0-1440)

When the second port (RS-232) of the Micro MV Liquid Flow Computer is configured as printer port, a snapshot report is generated every print interval (i.e., every five minutes, every hour, or every ten hours). Enter '0' to disable interval report.

Disable Interval Report

Enter '1' not to print interval report when there is on flow during the batch.

GM/CC Conversion Factor

This factor is used to reference the density to density of water (i.e. 0.999016) to establish specific and API gravity.

$$Specific\ Gravity\ = \frac{Density\ GM/CC}{Density\ of\ Water(gm/cc\ conversion\ factor\ )}$$

$$API\ Gravity\ = \frac{141.5 * Density\ of\ Water(gm/cc\ conversion\ factor)}{Density\ GM/CC} - 131.5$$

Run Switching

Run switching is used to switch from tube one to tube two, when flow rate reaches certain limits. The Micro MV Liquid Flow Computer has one active output that can be dedicated to this function. The time delay allows for some delay in switching.

> *Note: if Run Switching is being used, then the meter should be configured for a single stream (see Set Up under Meter).*

Run Switch High Set Point

When this flow rate value is exceeded and after the delay timer expires, the switch output will activate. This output normally opens meter run two. The Micro MV Liquid Flow Computer provides open collector type output that requires external power.

Run Switch Low Set Point

When the flow rate drops below this value and stays below it until the delay timer expires, the output switch will be turned off to shut meter two.

Daylight Saving Time (DST)

Enabling Daylight Saving Time (also called "Summer Time") sets the Flow Computer to automatically forward its time by one hour at 2:00 AM on a preset day ("Spring Forward") of the year and roll back on a second date("Fall Back").

If left in auto mode, the computer calculates the DST dates based on USA standards, which are, Spring Forward the first Sunday of April and Fall Back the last Sunday of October.

For countries with other DST dates, the user can enter dates manually. For example, European Summer Time starts the last Sunday in March and ends the last Sunday in October.

Effects of DST on Historical Data

Given the sudden time change that DST creates, the historical reports will show an hour with zero flow at 2:00 AM of Spring Forward Day and an hour with double flow at 1:00 AM of Fall Back Day, to achieve consistent 24-Hour a day flow records.

INPUT/OUTPUT

TRANSDUCER INPUT TAGS

Up to 8 alphanumeric ID number. The transmitters are referred to according to the TAG ID. All alarms are labeled according to TAG ID. The multi-variables are referred to according to the TAG ID. All alarms are labeled according to TAG ID.

STATUS INPUT/SWITCH OUTPUT ASSIGNMENT

Status Input Assignment

User can select any one of status input and assign it to input point.

	Assignment	Comments
1	End Meter#1 Batch	End the batch for Meter #1 and reset batch totalizer
2	End Meter#2 Batch	End the batch for Meter #2 and reset batch totalizer
3	End Meter#1/#2 Batch	End the batch for Meter#1 and #2; reset both batch totalizers
4	Alarm Acknowledge	Reset the previous occurred alarms output bit
5	Flow Direction	"Off"= forward and "ON"= reverse. For bi-directional meters
6	Spare Input#1	
7	Spare Input#2	
8	Spare Input#3	
9	Event Status	
10	Product ID Bit 0	Product ID Bits: Before ending batch, user can use status bits to select next product. These bits are read immediately at batch end. See the following table to specify a product.
11	Product ID Bit 1	
12	Product ID Bit 2	
13	Print Request	Step 1: set port 2 RTS type to 1 (Printer) Step 2: When this status is activated, the Micro MV Liquid Flow Computer will send the "Request Report" to the printer via the printer port.
14	Calibration Mode	
15	Meter#2 Flow Direction	
16	Display Freeze	Set to "ON" to halt scrolling and allow for continuous monitoring
17	Display Toggle	The display will scroll as the user toggles the status

****Product ID Bits***

Product Bit 2	Product Bit 1	Product Bit 0	Product Number
0	0	1	= 1
0	1	0	= 2
0	1	1	= 3
1	0	0	= 4
1	0	1	= 5
1	1	0	= 6
1	1	1	= 7

Examples:

```
Assign Status Input #1                    5
Assign Status Input #2                    14
Assign Status Input #3                    15
```

User is using status input #1 to monitor the flow direction of a bi-directional meter, and is using the remaining three inputs to monitor the product ID. When Status Input #2= 0 and #3= 1 and #4= 0, then product #2 is being monitored.

Switch Output Assignment

User can assign an output to each of the Micro MV Liquid Flow Computer's output switches from this list. The Micro MV Liquid Flow Computer switch outputs are open collector type, requiring external D.C power.
Outputs in the top list, "Pulse Outputs", require a definition of pulse output per unit volume. Therefore a Pulse Output Width must be defined when one of these switch types are chosen. These outputs are available through switches 1 or 2 only.
Outputs in the bottom list, "Contact Type Outputs", are ON/OFF type outputs. They can be assigned to any of the four switch outputs.

Switches 1 and 2 can be pulse or contact type output; switches 3, 4 are contact-type output only.

Assignments – Pulse Outputs

	Meter 1	Meter 2	Station
Gross	101	105	109
Net	102	106	110
Mass	103	107	111

Assignments – Contact Type Outputs

METER #:	**1**	**2**
Batch Ended (5 sec)	113	116
Batch Preset Warn.	114	117
Batch Preset	115	118
Meter Down	120	123
Flow Low	121	124
Flow High	122	125
Temperature Low	126	136
Temperature High	127	137
Pressure Low	128	138
Pressure High	129	139
Density Low	130	140
Density High	131	141
Dens.Temp Low	132	142
Dens.Temp High	133	143
DP Low	134	144
DP High	135	145
Direction – Forward	153	155
Direction – Reverse	154	156

Meter-Independent Parameters	
Day Ended (5 seconds)	119
Dens. Period Low	146
Dens. Period High	147
Temperature Out of Range	148
Gravity Out of Range	149
Pressure Out of Range	150
Active Alarms	151
Occurred Alarms	152
Status Input #1	157
Run Switch	158
Remote Control	159
Boolean Points*	170-199

Examples:

150 = Pressure out of range

110 = Net flow rate, station total

122 = Flow rate high, Meter #1

Note - Boolean Points Assignment 170 – Boolean Point 70
Boolean Points Assignment 171 – Boolean Point 71 etc.

Pulse Output and **Pulse Output Width**

Pulse Output is used to activate a sampler or external totalizer. The number selected will be pulses per unit volume or per unit mass. If 0.1 pulse is selected, the one pulse will be given every 10-unit volumes has passed through the meter.

Pulse Output Width is the duration, in milliseconds, of one complete pulse cycle (where each cycle is the pulse plus a wait period, in a 50/50 ratio). For example: If POW = 500 mSec, the Micro MV Liquid Flow Computer at most can produce one pulse each second regardless of the pulse per unit volume selected (500 mSec pulse + 500 mSec wait). If POW = 10 mSec the Micro MV Liquid Flow Computer can produce up to 50 pulses per second.

The Micro MV Liquid Flow Computer's maximum pulse output is 125 pulses/sec. The Pulse Output in combination with the Pulse Output Width should be set so that this number is not exceeded.

ANALOG OUTPUT ASSIGNMENT

TAG ID

Up to 8 alphanumeric ID number. The transmitters are referred to according to the TAG ID. All alarms are labeled according to TAG ID

Assignments:

	Meter 1	Meter 2	Station
Gross Flowrate	1	5	9
Net Flowrate	2	6	10
Mass Flowrate	3	7	11

	Meter 1	Meter2
DP	13	21
Temperature	14	22
Pressure	15	23
Density LB/FT3	16	24
Density Temperature	17	25
Density @60 – LB/FT3	18	26
DP LOW	19	27
DP HIGH	20	28
API	29	31
Specific Gravity	30	32
Density Pressure	36	37
API@60	38	39
SG@60	40	41
Meter PID	42	43
Density GM/CC	44	45

Meter-Independent Parameters	
Spare #1	33
Spare #2	34
Remote Control*	35

4-20mA

4-20mA selection must be proportional and within the range of the selected parameter. 4-20mA signals are 12 bits.

DISPLAY ASSIGNMENT

Display assignment selects up to 16 assignments. The Micro MV Liquid Flow Computer will scroll through them at the assigned delay time.

Assignment

4 Digits Selection, where

1st Digit: 0: Forward 1: Reverse

2nd Digit: 1: Meter#1 2: Meter#2 3: Station

3rd and 4th Digit: Selection (see table below)

Selection	Description
01	Flow Rate
02	Batch Total
03	Daily Total
04	Cum. Total
05	Previous Daily Total
06	Previous Batch Total
07	DP/DP Low, High
08	Temperature, Pressure
09	Density, Density at Base
10	Density Frequency, Densitometer Period, Density GM/CC
11	SG,SG@60, API, API@60
12	Product
13	Cali. Mass Flow Rate
14	Date/Time
15	Alarm
16	Spare #1, Spare #2
17	Density Temperature, Density Pressure
18	Last Batch Average Temperature, Pressure, Density
19	Last Batch Average API, SG, GM/CC
20	Program Variable #1-#4
21	Program Variable #5-#8

2 Digits Selection

20	Program Variable #1-#4
21	Program Variable #5-#8
22	Battery Voltage/ Image Version

Examples:

0113 Display Meter #1 Forward Previous Daily Gross Total

0104 Display Meter #1 Forward Batch Gross Total

1104 Display Meter #1 Reverse Batch Gross Total

1206 Display Meter #2 Reverse Batch Mass Total

138 Display Meter #1 Temperature

MODBUS SHIFT

Reassigns Modbus address registers on one Micro MV Liquid Flow Computer to variables for easy polling and convenience. Use Modbus Shift to collect values in scattered Modbus registers into a consecutive order. The Micro MV Liquid Flow Computer will repeat the assigned variables into the selected locations. Note: some Modbus registers are 2 byte/16 bit, and some are 4 byte/32 bit. Register size incompatibility could cause rejection to certain address assignments. Refer to the manual for more details and a listing of the Modbus Address Table Registers.

Note: Modbus shift registers are for READ ONLY

Example: you want to read the current status of switches #1 and #2 (addresses 2617 and 2618) and the Forward and Reverse Daily Gross Total for Meter #1 (Addresses 3173 and 3189). Make assignments such as:

```
3082=2617
3083=2618

3819=3173
3821=3189
```

MODBUS SHIFT – FLOATING POINT

Use Modbus Shift to collect values in scattered Modbus floating point registers into a consecutive order. The EPLU Flow Computer will repeat the assigned variables. (Refer to the Modbus Address Table Registers in Chapter 5) into the selected locations. (7501-7600)

***Note: Modbus shift registers are READ ONLY registers.**

BOOLEAN STATEMENTS AND FUNCTIONS

Each programmable Boolean statement consists of two Boolean variables optionally preceded a Boolean 'NOT' function (/) and separated by one of the Boolean functions (**&, +, *).** Each statement is evaluated every 100 milliseconds. Boolean variables have only two states 0 (False, OFF) or 1 (True, ON). Any variable (integer or floating point) can be used in the Boolean statements. The value of Integer or floating point can be either positive (TRUE) or negative (FALSE).

Boolean Functions	**Symbol**
NOT	**/**
AND	**&**
OR	+
EXCLUSIVE OR	*****

Boolean points are numbered as follows:

0001 through 0050	Digital I/O Points 1 through 50
0001 –	Status Input/Digital Output #1
0002 –	Status Input/Digital Output #2
0003 –	Status Input/Digital Output #3
0004 –	Status Input/Digital Output #4
0005 – 0050	Spare
0070 through 0099	Programmable Boolean Points (Read/Write)

Boolean Points

0100 through 0199 Meter #1 Boolean Points
0200 through 0299 Meter #2 Boolean Points

1st digit–always 0, 2nd digit–meter number, 3rd and 4th digit-Selection

0n01 Gross Flow Pulses
0n02 Net Flow Pulses
0n03 Mass Flow Pulses
0n04 Spare
0n05 Meter Active
0n06 Batch Ended Flag (last 5 Seconds)
0n07 Any Active Alarms
0n08-0n10 Spare
0n11 DP Override in use
0n12 Temperature Override in use
0n13 Pressure Override in use
0n14 Density Override in use
0n15 Densitometer Temperature Override in use
0n16 Densitometer Pressure Override in use
0n16-0n19 Spare
0n20 Flow Rate High Alarm
0n21 Flow Rate Low Alarm
0n22 Temperature High Alarm
0n23 Temperature Low Alarm
0n24 Pressure High Alarm
0n25 Pressure Low Alarm
0n26 Density High Alarm
0n27 Density Low Alarm
0n28 Densitometer High Alarm
0n29 Densitometer Low Alarm
0n30 DP Inches High Alarm
0n31 DP Inches Low Alarm
0n32 Densitometer Period High Alarm
0n33 Densitometer Period Low Alarm
0n34 Densitometer Pressure High Alarm
0n35 Densitometer Pressure Low Alarm

301 through **0699** Spare

0701 through **0799** Station Boolean Points

0701 Station Gross Flow Pulses
0702 Station Net Flow Pulses
0703 Station Mass Flow Pulses
0704 N/A
0705 Day Ended Flag (Last 5 Seconds)
0706-0710 Spare
0711 Run Switch

0801 through 0899 Command Boolean Points

0801 Request Snapshot Report
0802 Alarm Acknowledge
0803 End Meter #1 Batch
0804 End Meter #2 Batch
805 End Meter#1 and Meter#2 Batch

VARIABLE STATEMENT TAGS

These tags are provided to add a meaningful description for the program variables.

PROGRAM VARIABLE STATEMENTS

From the MicroMV Flow Computer Configuration Software, Point cursor to **'I/O',** scroll down to **'Program Variable Statements'** and a window will pop up allowing you to enter the statements.

Enter the user programmable statements (**no space allowed**, up to 69 statements). Each statement contains up to three variables and separated by one of the mathematical functions. ***4 digits are required*** for referencing programmable variables or Boolean points. (Example: 0001+7801)

Example:
7832 is equal to total of variable#1(Modbus addr.7801) and variable#2 (Modbus addr.7802)
32=7801+7802

VARIABLE STATEMENTS AND MATHEMATICAL FUNCTIONS

Each statement can contain up to 3 variables or constants.

Function	Symbol	
ADD	**+**	Add the two variables or constant
SUBTRACT	**-**	Subtract the variable or constant
MULTIPLY	*****	Multiply the two variables or constant
DIVIDE	**/**	Divide the two variables or constants
CONSTANT	**#**	The number following is interpreted as a constant
POWER	**&**	1st variable to the power of 2nd variable
ABSOLUTE	**$**	unsigned value of variable
EQUAL	**=**	Move result to another variable Variable within the range of 7801-7899 (floating points) Variable within the range of 5031-5069 (long integer)
IF STATEMENT	**)**	Compares the variable to another

Example: 7801)T7835 (if variable is greater to or is equal to 1 then go to 7835)
7801)7802=#0 (if variable is greater to or is equal to 1 then set variable 7802 to 0)

GOTO STATEMENT	**T**	Go to a different statement (**forward only**)

Example: 7801%#60**T**7836 (if variable is equal to 60 then go to statement 7836)

COMPARE	**%**	Compare a value (**EQUAL TO**)
GREATER/EQUAL	**>**	Compare a value (**GREATER OR EQUAL TO)**

Example: 7801>7802**T**7836
(If variable 1 is greater to or equal to variable 2 then go to 7836)

Natural Log	**L**	Natural Log of variable

Order of precedence – absolute, power, multiply, divide, add and subtract.
Same precedence – left to right

Hourly Report – 7776–7780, (Read/Write) 5 variables will be reset at the end of hour.
Daily Report – 7781–7785, (Read/Write) 5 variables will be reset at the end of day.
Batch Report – 7786–7790, (Read/Write) 5 variables will be reset at the end of batch.
Scratch Pad Variables – Floating Point – 7801-7830 (Read or Write)
- Long Integer – 5041 – 5079 (Read or Write)

INPUT ASSIGNMENT

DP/Pressure/Temperature Assignment

The Micro MV Liquid Flow Computer provides 4 analog inputs, 4 status input/switch outputs, one density frequency input, two turbine inputs, one 4 wire RTD inputs, and multi variable inputs. In order for the Micro MV Liquid Flow Computer to read the live input, the input must be properly assigned and properly wired.

0=	Not Used
1=	Analog 1
2=	Analog 2
21=	Analog 5
24=	Analog 8

3=	Analog 3
4=	Analog 4
5=	RTD 1
22=	Analog 6
24=	Analog 9

7 =	Dens.Freq (Not Selectable)
10 =	Multi. Variable Module
23=	Analog 7

4mA and 20mA

Enter the 4mA value and the 20mA value for the transducer.
Note that these values cannot be edited if **`Assignment`** = 0 or 10. Therefore to set the parameter **`Temperature @4mA`** the **`Temperature Assignment`** parameter cannot equal zero, or 10.

Low/High Limit

Enter the low and high limits. When live values exceeds high limit or less than low limit, an alarm log will be generated.
Note that this value cannot be edited if **`Assignment`** = 0. Therefore to set the parameter **`Meter Temperature Low Limit`** the **`Temperature Assignment`** parameter cannot equal zero.

Maintenance Value

It is the value to be used when the transmitter fails or while is being calibrated. Set fail code to 1 while calibrating.
Note that this value cannot be edited if **`Assignment`** = 0. Therefore to set the parameter **`Meter Temperature Maintenance`** the **`Temperature Assignment`** parameter cannot equal zero.

Fail Code

Fail Code 0: always use the live value even if the transmitter failed.
Fail Code 1: always use the maintenance value
Fail Code 2: use maintenance value if transmitter failed. I.e. 4-20mA is >21.75 or <3.25)

Use Stack DP

The Micro MV Liquid Flow Computer allows the user to select dual DP transmitters on each meter for better accuracy and a higher range flow. Use in conjunction with the DP Switch High % parameter setting.

DP Switch High %

The Micro MV Liquid Flow Computer will begin using the high DP when the low DP reaches the percent limit assigned in this entry. Example: DP low was ranged from 0-25 inches and switch % was set at 95%. When low DP reaches 23.75 in (= 0.95 * 25) the Micro MV Liquid Flow Computer will begin using the high DP provided the high DP did not fail. When the high DP cell drops below 23.75, the Flow Computer will start using the Low DP for measurement.

Density Type

If live density is connected to the meter, user must enter the density type. Raw density frequency or a 4-20mA input can be selected. This density will be used to calculate mass flow and net flow.

Density Type	Densitometer
Type 0	None
Type 1	4–20 mA
Type 2	UGC
Type 3	Sarasota
Type 4	Solartron
Type 5	UGC2

Density 4–20 mA Type	
Type 0	Specific Gravity 4-20mA
Type 1	API Gravity 4-20mA
Type 2	Density Signal 4-20mA in GM/CC

Density 4-20mA Type (Density Unit)

Note that this type of input requires the user to choose a subtype, as indicated in the table above.

Use Meter Temperature as Density Temperature

Allows the meter temperature to calculate the effect of temperature on the densitometer. Make sure the meter and density temperature are similar to avoid measurement errors.

Use Meter Pressure as Density Pressure

To allow the meter pressure to calculate the effect of pressure on the densitometer. Make sure the meter and density pressure are similar to avoid measurement errors.

Spare Assignment

Spare input is used for display and alarm purpose only. It is not used in the calculation process. To read spare input value, use the diagnostic screen

FC PORTS

Unit ID Number

The Unit ID Number is used strictly for communication purposes; it can take any value from 1 to 247.

> *Note: Do not duplicate the Unit ID number in a single communication loop! This situation will lead to response collisions and inhibit communications to units with duplicate ID numbers.*

Only one master can exist in each loop.

Flow Computer Ports

Port #1/#3 Modbus Type

> *Note: this parameter must be set the same for both the PC and the Micro MV Liquid Flow Computer for communication to occur.*

The Modbus Communication Specification is either Binary RTU or ASCII.

Port #1/#3 Parity

> *Note: this parameter must be set the same for both the PC and the Micro MV Liquid Flow Computer for communication to occur.*

RTU - NONE
ASCII - EVEN or ODD

Set the parity to match the **`Modbus Type`**.

Port #1/#3 Baud Rate

> *Note: this parameter must be set the same for both the PC and the Micro MV Liquid Flow Computer for communication to occur.*

Baud rate is defined as number of bits per second. The available selections are 1200, 2400, 4800, 9600, or 19200.

Port #1/#3 RTS Delay

This function allows modem delay time before transmission. The Micro MV Liquid Flow Computer will turn the RTS line high before transmission for the entered time delay period.

Port #2 Baud Rate

Baud rate is defined as number of bits per second. The available selections are 1200, 2400, 4800, 9600, or 19200.

Port #2 Modbus Type

> *Note: this parameter must be set the same for both the PC and the Micro MV Liquid Flow Computer for communication to occur.*

The Modbus Communication Specification is either Binary RTU or ASCII.

Port #2 Parity

RTU - NONE
ASCII - EVEN or ODD

Set the parity to match the **`Modbus Type`**.

Select 0=RTS, 1=Printer

RTS line has dual function selection: either RTS for driving request to send or transmit to serial printer. To use serial printer interface for printing reports, i.e. batch, daily, and interval Connect the serial printer to RTS and common return, and select 1 for printer.

Port 2 RTS Delay

This function allows modem delay time before transmission. The Micro MV Liquid Flow Computer will turn the RTS line high before transmission for the entered time delay period.

Printer Baud Rate

Baud rate is defined as number of bits per second. The available selections are 1200, 2400, 4800, or 9600.

Printer Number of Nulls

This function is used because no hand shaking with the printer is available and data can become garbled as the printer's buffer is filled. The Micro MV Liquid Flow Computer will send nulls at the end of each line to allow time for the carriage to return. Printers with large buffers do not require additional nulls. If data is still being garbled, try reducing the baud rate to 1200.

Port 3 (Second 485 port)

The second 485 communication port can be set as ready only and reject any write command.
Check the box to disable write command via the second 485 port

Mater Port

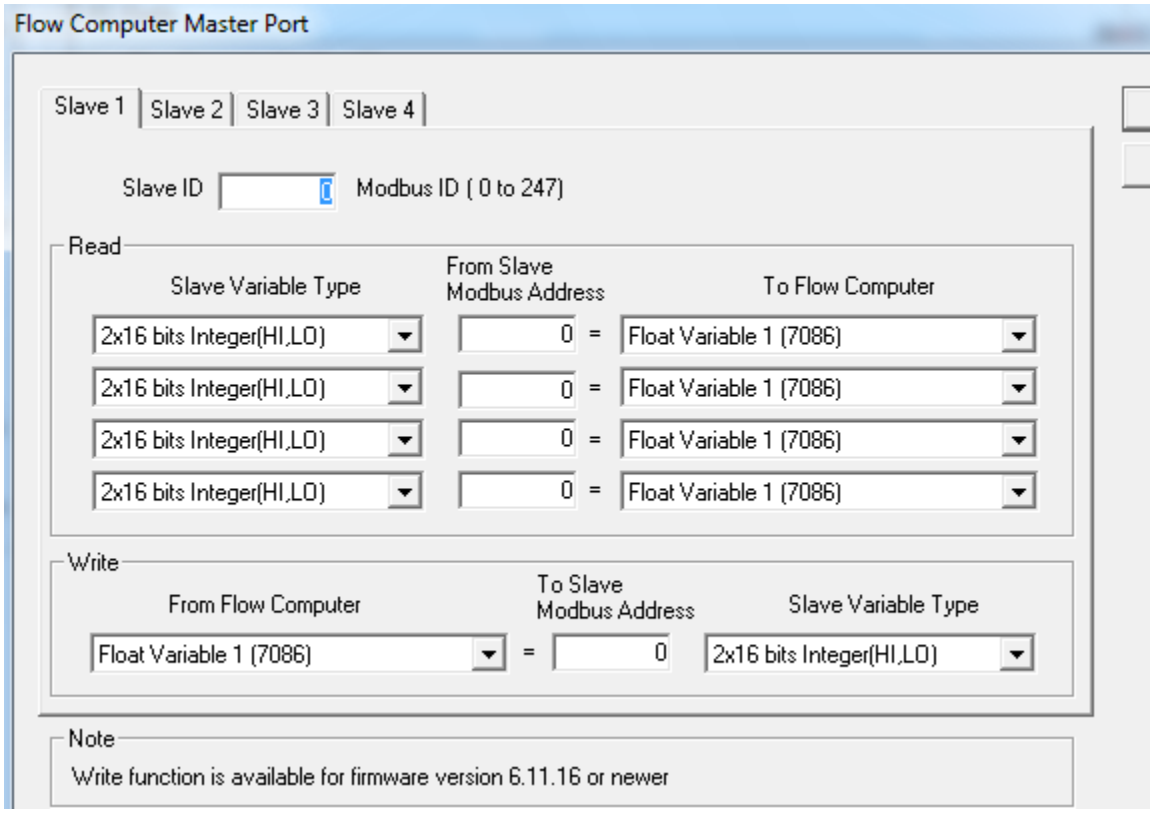

The Micro MV can poll up to four slaves

Slave Unit ID

The Slave Unit ID Number is used strictly for communication purposes; it can take any value from 1 to 247.

Read Function

Slave Variable Type

Variable type describes the position of high, low words of slave device. When a 32 bits (two words) register is polled, it is essential to define where the highest significant word is.

Code	Description	Sequence in words
0	2 registers of 16 bits integers	High, Low
1	1 register of 32 bits floating	Low, High
2	2 registers of 16 bits floating	Low, High
3	1 register of 32 bits integer	High, Low
4	2 registers of 16 bits integers	Low, High
5	1 register of 32 bits floating	High, Low
6	2 registers of 16 bits floating	High, Low
7	1 register of 32 bits integer	Low, High

From Slave Modbus Address

It defines the actual registers being polled from the slave device. Slave Modbus address is considered to be continuous without zero address in between.

Example: Meter #1 density uses micro motion density.
Slave ID = Micro Motion ID ***VT*** = 2, ***DEST***=22, ***ADDR***=248

To Flow Computer (Destination Address)

Destination defines where the polled variables are used in the flow computer. Variable statements and other pre-defined locations are accepted. Pre-defined locations are temperature, pressure, and density. Variables can be accessed through the display and reports.

0	Floating Var#1 (7086)
1	Floating Var#1 (7087)
2	Floating Var#1 (7088)
3	Floating Var#1 (7089)
4	Floating Var#1 (7090)
5	Floating Var#1 (7091)
6	Floating Var#1 (7092)
7	Floating Var#1 (7093)
8	Floating Var#1 (7094)
9	Floating Var#1 (7095)

10	Integer Var#1(5081)
11	Integer Var#2(5083)
12	Integer Var#3(5085)
13	Integer Var#4(5087)
14	Integer Var#5(5089)
15	Integer Var#6(5091)
16	Integer Var#7(5093)
17	Integer Var#8(5095)
18	Integer Var#9(5097)
19	Integer Var#10(5099)

20	Meter#1 TF.Deg.F
21	Meter#1 PF.PSIG
22	Meter#1 DF.LB/FT3
23	Meter#2 TF.Deg.F
24	Meter#2 PF.PSIG
25	Meter#2 DF.LB/FT3

Write function

(Write function is available for firmware 6.11.16 or later)

From Flow Computer (Source Address)

It defines the data of actual register being written to the slave device.

To Slave Modbus Address (Destination Address)

It defines the actual register being written to the slave device. Slave Modbus address is considered to be continuous without zero address in between.

Slave Variable Type

Variable type describes the position of high, low words of slave device. When a 32 bits (two words) register is polled, it is essential to define where the highest significant word is.

Code	Description	Sequence in words
0	2 registers of 16 bits integers	High, Low
1	1 register of 32 bits floating	Low, High
2	2 registers of 16 bits floating	Low, High
3	1 register of 32 bits integer	High, Low
4	2 registers of 16 bits integers	Low, High
5	1 register of 32 bits floating	High, Low
6	2 registers of 16 bits floating	High, Low
7	1 register of 32 bits integer	Low, High

Floating Point Mode

Number of Bytes

Selection	Description
4 Bytes	One Register - 4 Bytes
2 Bytes	Two Registers – 4 Bytes

Bytes Order

Selection	Description
HI, LO	Data - 4 Bytes HI HI LO LO
LO, HI	Data - 4 Bytes LO LO HI HI

BATCH PARAMETERS

Day Start Hour

Day start hour is used for batch operation. If daily batch is selected, the batch will end at day start hour. All batch totalizers and flow weighted values are reset.

Batch Type

If daily batch selected, the batch will end at the day start hour. On demand type will end the batch, when the Micro MV Liquid Flow Computer is requested to end the batch manually. Time-based batch type will end batch at batch set date and day start hour. Flow-based batch type will end batch when flow drops below cut off frequency.

Batch Starting Date

If time based batch is selected, use this entry to determine the date to end the batch.

Disable Batch Preset

Disable batch preset is to eliminate the warning and alarms associated with batch presets. Batch Preset does not end batch, it will provide switch output and warning indications.

Batch Ticket Number

This number will increment by one at the end of batch.

Next Batch Preset/Warning Volume

Enter the batch preset volume and batch preset warning for the next batch.

Next Batch Product Number

Enter the product number for the next batch.

PRODUCTS

End the current batch is required to use the new product data settings.

Product Number

Up to 16 products.

Product Name

Up to 16 characters.

Table Selection

0=	5A/6A -> *Crude-API(2004)
1=	6A -> *Crude-API(2004)
2=	5B/6B -> *Refined Product API(2004)
3=	6B -> *Refined Product API(2004)
4=	23A/24A -> *Crude – SG (2004)
5=	24A -> *Crude – SG (2004)
6=	23/24B -> *Refined Product –SG(04)
7=	24B -> *Refined Product –SG(04)
8=	OLD23/24
9=	OLD24
10=	24C -> *Special Product-SG (2004)
11=	6C -> *Special Product-API (2004)

12=	API2565-Propylene
13=	API2565–Ethylene
14=	Pure Butadiene
15=	NBS1045
16=	Water
17=	Ethylene-API2565-NBS1045
18=	New 23/24
19=	ASTM1550A/B
20=	ASTM1550B
21=	NIST14
22=	PPMIX
23=	Brine Water

50	Crude-API(2004)**
51	Refined Product API(2004)**
52	Lubricating API(2004)**
53	Special Product-API (2004)**
54	Crude – SG (2004)**
55	Refined Product –SG(04)**
56	Special Product-SG (2004)**

*Note: Use API2004 table if the firmware version is 6.10 or higher

**Note: Set API@60°F /SG@60°F data entry to zero if a live densitometer is used

Table A is for Crude, the Table B is for refined products, the Table C is for special products - butadiene, toluene.

Crude/Refined/Lubricating Prod/Special Product: use API 2004, D1250-04.

(Refer to API Manual of Petroleum Measurement Standards:

Chapter11-Physical Properties Data/Section 1-Temperature and Pressure Volume Correction "Factors for Generalized Crude Oils, Refined Products, and Lubricating Oils/May2004, and Addendum 1/September 2007)

Temperature, Pressure and Density Limits for Crude Oil, Refined Products, Lubricating Oils

	Crude Oil	Refined Products	Lubricating Oils
Density, kg/m^3@ 60°F	***610.6 to 1163.5***		***800.9 to 1163.5***
Relative Density @ 60°F	0.61120 to 1.16464		0.80168 to 1.1646
API Gravity @ 60°F	100.0 to -10.0		45.0 to -10.0
Kg/m^3@ 15°C	611.16 to 1163.79	611.16 to 1163.86	801.25 to 1163.85
Kg/m^3@20°C	606.12 to 1161.15	606.12 to 1160.62	798.11 to 1160.71
Temperature, °C	***-50.00 to 150.00***		
°F	-58.0 to 302.0		
Pressure, psig	***0 to 1,500***		
kPa (gauge)	0 to 1.034x10^4		
Bar (gauge)	0 to 103.4		
α_{60},per °F	***230.0x10^{-6} to 930.0x10^{-6}***		
per °C	414.0x10^{-6} to 1674.0x10^{-6}		

SG and Temperature limits for New Table 23/24

SG	.21 to .74
Temperature	-50 Deg.F to 100 Deg.F

SG@60 and Temperature Limits for New Table 24

SG@0	.35 to .688
Temperature	-50 Deg.F to 100 Deg.F

For this Product	Use this Table	Under these Conditions
Crude oil, natural gasoline, drip gasoline	6A,24A/Crude(04)	Density is known
Crude oil, natural gasoline, drip gasoline	5A/6A,23A/24A, Crude(2004)	Live densitometer used
Gasoline, naphthalene, jet fuel, aviation fuel, kerosene, diesel, heating oil, furnace oil	5B/6B,23B/24B, Refined Product	live density is used
Gasoline, naphthalene, jet fuel, aviation fuel, kerosene, diesel, heating oil, furnace oil	6B,24B, Refined Product	No live density is used
Benzene, toluene, styrene, *ortho*-xylene, *meta*-xylene, acetone	6C/24C. Special Product	All conditions
LPG, NGL	New 23/24	All conditions
Butadiene	ASTM1550A/B	live density is used
Butadiene	ASTM1550B	Density is known
Mixture Property	NIST14	All conditions
PPMix	PPMIX	Live density is used

When Ethylene-API2565-NBS1045 is selected and API2565 is out of range, NBS 1045 is used for calculations.
Light products: GPA15 is used to calculate vapor pressure. Pressure correction is performed per Ch. 11.2.1, Ch. 11.22.

This Parameter is Required if no live Densitometer is installed	For These Tables
`API Gravity at 60 Deg.F`	1, 3, 11
`Specific Gravity at 60 Deg.F`	5, 7, 9, 10, 14
`Density at 60 Deg.F`	12, 13, 15, 16, 17
`Alpha T E-6`	10, 11,53,57

Alpha T E-6

The Alpha T will be prompted only if table 6C or 24C is selected. Enter Alpha T value, the number entered will be divided by 10^{-6}.

Example: Entered Value 335 (Actual value 0.000335)

Products Data - Live Densitometer or No Live Densitometer Setting

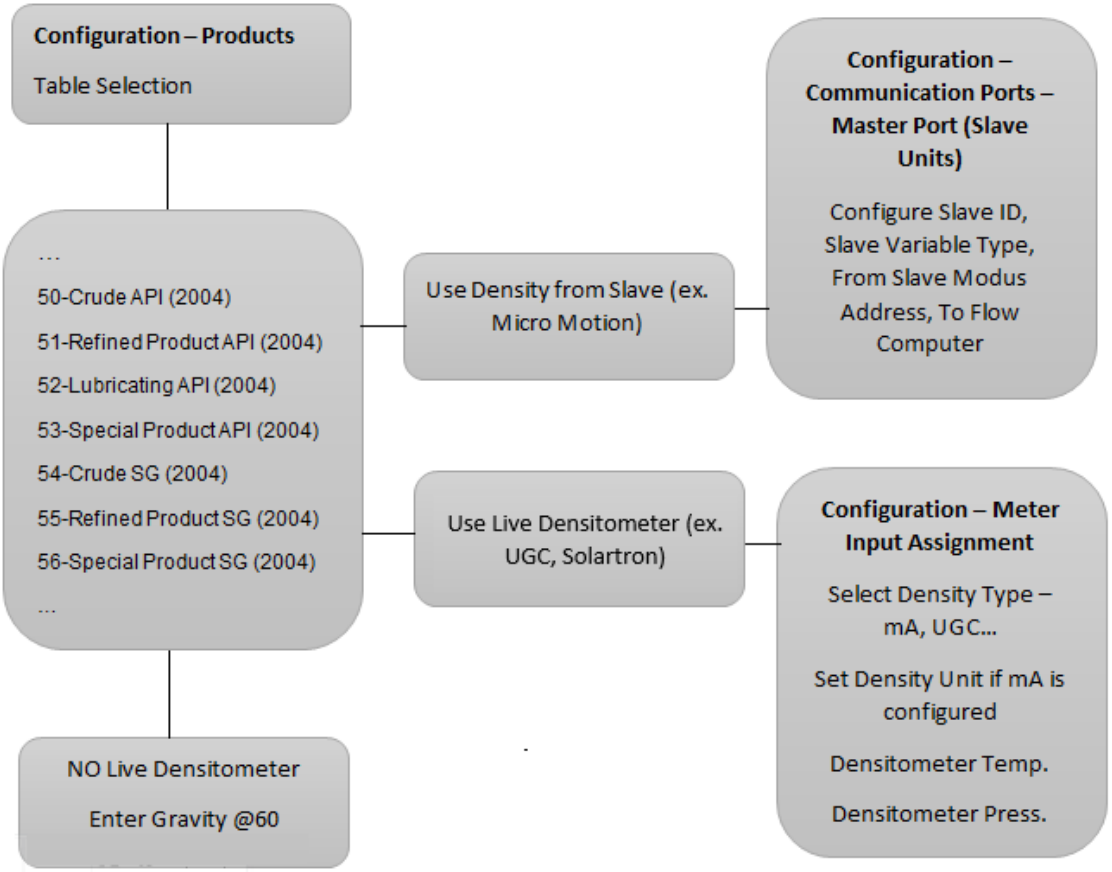

PID PARAMETERS

PID CONFIGURATION

(PID) Proportional Integral Derivative control– We call this function PID, however the flow computer performs Proportional Integral control. And does not apply the Derivative. The Derivative is not normally used in flow and pressure control operations and complicates the tuning operation

Use Flow Loop

(Valid entries are 0 or 1)
Enter 1 if the computer performs flow control.
Enter 0 if the flow computer does not perform flow control.

Flow Loop Maximum Flow rate

Enter the maximum flow rate for this meter. This rate will be basis for maximum flow rate to control at.

Flow Set Point

Enter the set point. The set point is the flow rate that the flow computer will try to control at.

Flow Acting – forward or reverse

Enter 0 if the control is direct acting, Enter 1 if the control is reverse acting.
Direct acting is when the output of the controller causes the flow rate to follow in the same direction. The output goes up and the flow rate increases. A fail Close valve located in line with the meter will typically be direct acting. If the Controller output signal increases, the control valve will open more causing the flow rate to increase.
Reverse acting is when the output of the controller causes the opposite action in the flow rate. A fail open valve in line with the meter will typically be reverse acting. If the Controller output increases the control valve will close some causing the flow rate to decrease.
Care must be taken to study where the valves are located in relation to the meter and whether the valves are fail open or fail close to understand if the controller should be direct or reverse acting. Some control valves can be fail in position (especially Electrically actuated control valves). This valve should be studied to understand if the actuators themselves are direct or reverse acting.

Use Pressure Loop

(Valid entries are 0 or 1)
Enter 1 if the computer performs pressure control.
Enter 0 if the flow computer does not perform pressure control.

Pressure Maximum

Enter the Maximum pressure for this meter. This pressure will be basis for Maximum pressure to control at.

Pressure Set Point

Enter the set point. The set point is the pressure that the flow computer will try to control at.

Pressure Acting – forward or reverse

Enter 0 if the control is direct acting, Enter 1 if the control is reverse acting.
Direct acting is when the output of the controller causes the pressure to follow in the same direction. The output goes up and the pressure increases. A fail open valve located in the line downstream of the meter will typically be direct acting to maintain the pressure at the meter. An Increase in the output from the controller will cause the control valve to close thus causing the pressure to increase.
Reverse acting is when the output of the controller causes the opposite action in the flow rate. A fail close valve in the line downstream of the meter will typically be reverse acting to maintain the pressure at the meter. An increase in the output signal will cause the valve to open, which will cause the pressure to be released thus causing the pressure to decrease.
Care must be taken to study where the valves are located in relation to the meter and whether the valves are fail open or fail close to understand if the controller should be direct or reverse acting. Some control valves can be fail in position (especially Electrically actuated control valves). These valves should be studied to understand if the actuators themselves are direct or reverse acting.

System Data Minimum Output

Enter the minimum output percent (default to 0)

System Data Maximum Output

Enter the maximum output percent (default to 100.0)

Signal Selection

If flow loop and pressure loops are both configured in the PID control loop, select high or low signal to be the output.

PID flow Base

PID flow rate base can be gross, net, or mass flow rate.

PID TUNING

Flow Controller Gain

(Allowable Entries 0.0 – 9.99)
The gain is effectively 1/Proportional Band.
The basis of theory for proportional band is the relationship of the percentage of the output of the controller to the percentage of the change of the process. In this case, if the control output changes 5% the flow rate should change 5%, the proportional band would be 1.0 and the gain would be 1.0.
If the percentage of the output is 5% and the flow rate would change by 10%, the proportional band would be 2 and the Gain would be 0.5
However since you do not know until you are flowing the effect of the output on the flow rate, you have to start somewhere. A good starting point is to use a proportional band of 0.5 if the valve is properly sized.

Flow Controller Reset

(Allowable Range 0.0 – 9.99)
Reset is the number of minutes per repeat is the time interval controller adjusts the output to the final control element. If the reset is set at 2, the flow computer will adjust the signal to the flow control valve every 2 minutes. If the Reset is set at 0.3, the output signal will be adjusted approximately every 20 seconds, until the process and set point are the same.
The rule of thumb is the reset per minute should be set slightly slower that the amount of time it takes for the control valve and the flow rate to react to the flow computer output signal changing.
This can only be determined when there is actual flow under normal conditions. It is best to start the reset at 0.3 or reset the signal every 3 minutes, if the control valve is properly sized.

Pressure Controller Gain

(Allowable Entries 0.0 – 9.99)
The gain is effectively 1/Proportional Band.
The basis of theory for proportional band is the relationship of the percentage of the output of the controller to the percentage of the change of the process. In this case, if the control output changes 5% the pressure should change 5%, the proportional band would be 1.0 and the gain would be 1.0.
If the percentage change of the output is 5% and the pressure would change by 10%, the proportional band would be 2 and the Gain would be 0.5.
However since you do not know until you are flowing the effect of the output on the pressure, you have to start somewhere. A good starting point is to use a proportional band of 0.5 if the control element is properly sized.

Pressure Controller Reset

(Allowable Range 0.0 – 9.99)
Reset is the number of times per minute the controller adjusts the output to the control valve. If the reset is set at 2, the flow computer will adjust the signal to the final control element every 2 minutes. If the Reset is set at 0.3, the output signal will be adjusted approximately every 20 seconds, until the process and the set point are the same.
The rule of thumb is the reset per minute should be set slightly slower that the amount of time it takes for the control valve and the pressure to react to the flow computer changing the output.
This can only be determined when there is actually flow under normal conditions. It is best to start the reset at 0.3 or reset the signal every 3 minutes, if the control element is properly sized.

Download Firmare/Image File

To Download an Image File to the Flow Computer select the Tools option form the menu, and then Download Program.

A small dialog will appear asking for the file name of the image file. Type it in or use the Browse option to locate it. Once the file name is in place press Download. This task will take about 5 minutes to be completed.

Security

SECURITY CODES

The desktop application provides 4 security areas to prevent users from entering data into certain areas. The four areas are:

Configuration: Allow user to modify device configuration settings.

Override: Allow user to change values directly on the device.

Calibration: Let the user to calibrate the device inputs.

Image File Download: Let user download an image file to the device. This procedure will erase all the information and configuration stored in the device.

Master Access: Once the master access is granted, the user can access to all four areas.

Use the **Tools|Security Codes** option to modify the access code; a form will appear showing the five different security areas and the actual access status (at bottom of the form). To put a new access code log in to the desired security area and press Change security Code, type in the code and retype it on the confirm space to avoid mistyped codes. Then click [OK].

The system will update the security access every time the application connects to the device and every time data is written to the device it will check for security access before writing.

NOTE: In case the access code is forgotten contact our offices for a reset code.

Connect to Device

Click

to establish the communication. If the communication is failed, check information in the “Communication Port Settings”.

Go Offline

Click

to disconnect the communication.

Modbus Driver

DFM provides this tool to read and write Modbus registers from and to the MicroMV flow computers. It will display transmitting and receiving message in HEX format. It should be used for testing purpose only.

PID OPERATING

Click PID Loops icon to display PID output percentage, flow, and pressure data. To change setup, select entries under PID menu.

CALIBRATION

Calibrations are performed under **Calibration**. . Select inputs to be calibrated, and then select full, single, offset calibration method. (See details in chapter 1)

Calibrate Mode

To calibrate Flow Computer, totalizers will continue at same rate where live parameters will show actual value, i.e. flow rate, DP, pressure etc. Enter '1' to enable this feature.

SET TIME (1-9 HOUR)

This entry is the duration for the calibrate mode. After time expires, the Micro MV Flow Computer will resume its normal operation.

MASS FLOW RATE OVERRIDE

Override the mass flow rate during the calibration. Wedge meter and frequency device will continue at same snapshot rate and can't be overridden.

Calibration - Display

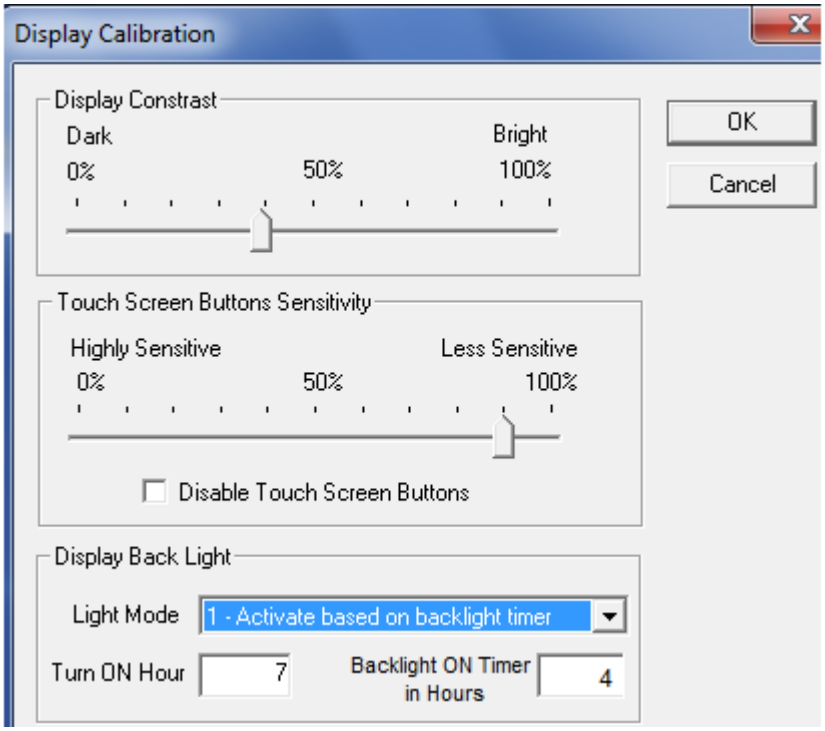

Display backlight mode

Display Backlight Mode	Description
0	60 seconds ON after a touch screen sensor is activated
1	Activate based on backlight timer Turn ON Hour and Backlight ON Timer in Hours
2	Backlight always OFF

Parameter Overrides:

Temperature Override

This value is entered when no live temperature is available, or when a different value from the live value should be used.

Pressure Override

Pressure override can be used when no live pressure transmitter is connected to the Micro MV Liquid Flow Computer.

API/SG/Density Override

Enter Gravity Override to replace current gravity. The gravity override is a non-retroactive gravity and will not override the product file gravity. It only applies to the current running batch.

Orifice ID Override

Orifice ID in inches is the measured diameter of the orifice at reference conditions.

Current Batch Preset

Enter the value to override the current batch preset or batch preset warning volume

Equilibrium Pressure Override

Enter equilibrium pressure override to the current batch.

Alpha T E-6 Override

Enter Alpha T Override to the batch. It will not affect the Alpha T value in the product file. Alpha T is the thermal expansion coefficient for the selected product. The flow computer divides by 1000000.

Example: 0.000355 = 355 / 1000000 (value entered is *335* for an Alpha T of 0.000355)

Wedge Fa Override and Wedge Kd2 Override

$$\textbf{Flow Rate (GPM)} = (5.668 \, x \, F_a \, x \, K_d{}^2) \times \sqrt{\frac{DP}{SG}}$$

$$DP = differential\ pressure, inches\ of\ water$$

$$SG = liquid\ specific\ gravity\ at\ flow\ conditions$$

$$F_a = Expansion\ coefficient\ of\ wedge$$

$$K_d{}^2 = Discharge\ coefficient\ of\ wedge$$

Venturi C Override

The value is the discharge coefficient for Venturi flow equations. The default value is .9950

SYSTEM

DATE AND TIME

Change the date and time for the flow computer.

RESET CUMULATIVE TOTALIZER

Enter reset code to reset accumulated volume.
Non-resettable gross and net accumulated volume will roll over at 99999999.9.
Non-resettable mass accumulated volume will roll over at 9999999.99.

CLEAR SYSTEM

Enter reset system code to reset all data.

END BATCH

The batch will end if requested through this menu. The current batch totalizer and flow weighted data will reset to zero. Non-resettable totalizers are not affected by the batch resetting.

HISTORICAL DATA

VIEW, CAPTURE AND STORE

To retrieve historical data, go to **Historical Data** menu. The **View** option retrieves the data from the flow computer but does not store the information into the database. The second option, **Capture and Store**, retrieves the information, shows it on the screen and stores it on the database.

On any of these options, a small dialog like the following appears to select the amount of reports to get and from which one to start.

The valid data entries are shown at the bottom of the dialog. The available types of reports are:

PREVIOUS HOURLY DATA

Up to 32 previous hourly data (336 previous hourly data for version 11.00.00 or later) are stored in the Flow Computer. Enter first report and the Flow Computer will go backward from that selected report. Current hour cannot be selected.

PREVIOUS DAILY DATA

Up to 35 previous daily reports can be retrieved.

LAST MONTH DATA

Last month data is stored in the Flow Computer. Select meter number to display, print, or capture. Current month data cannot be retrieved.

ALARM REPORT

Up to 100 previous alarm data can be retrieved. The data are starting from the most recent to the oldest.

AUDIT REPORT

The audit trail report shows configuration parameter that has changed which could influence the calculated numbers. The Flow Computer provides up to 100 event logs. One purpose for audit trail is to back track calculation errors that result from mistakes by the operator of the flow computer operator.

BATCH REPORT

Up to 32 previous batch reports can be retrieved.

Viewing Previously Captured Reports

Once a report is stored in the database using the **Historical Data|Capture and Store** option it can be seen using the **Previously Captured Reports** option under the Historical Data Menu.

When the option is selected, a dialog will appear asking for the name of the report you want to see. There is a "View last captured report" option than will show the data acquired the last time from a device. If you want to see another report different than the last one just type the name of the report in the space provided. The browse button can be used to see the list of reports stored in the database.

Exporting or Printing Reports

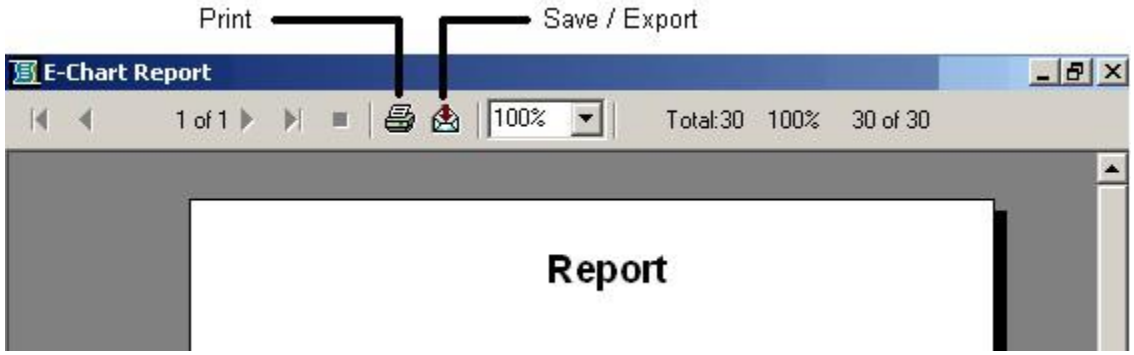

Once the data is retrieved from the Flow Computer it is shown in a report format, like the picture above. On this window there are several buttons.

- **Arrow** buttons let you go through all the reports captured.
- The **Print** Button (shown o the picture) lets you print the report to any printer installed in your computer. The printed version will look just like it is shown on the screen.
- The **Export** Button allows the user to save the report in different formats. Once the button is pressed a small dialog appears showing the different formats available (see following picture).

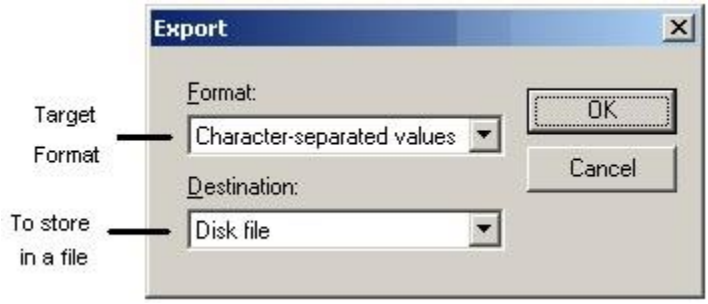

In the first box select the format you want the file to have. **Excel**, **Word** or **HTML** formats are recommended because they preserve the report format. The plain text formats (text-format, CSV comma separated values, tab-separated values) include all the information but will require user modification to improve readability. The other text formats are **text** or **paginated text**. **IMPORTANT:** when a report is exported to text format it can only be 80 character wide, thus, some numbers might appear together making it hard to determine their original values. (i.e. values 1.2543 and 34.2342 on following columns might appear as 1.254334.2342).

Once the export format is selected, press OK and a dialog will appear asking for the file name that you want for the report. Type in the name and press SAVE.

SCHEDULED AUTO POLLING

Automatic Data Polling

Use the **Historical Data**|**Scheduled Auto Polling** to retrieve report information from devices in a periodic basis automatically.

These are the following settings:

Enable Automatic Data Retrieval: Check this option to enable the automatic polling. If the automatic polling function is enabled an "AUTOPOLL" message will appear on the application's status bar (bottom-right corner of the application window).

Reports to Retrieve: check the reports you want to get from the devices, you can select as many as you want, just make sure the polling interval is long enough to allow the PC to retrieve the archive. For example, if the computer is programmed to poll 100 reports every 10 seconds, there will not be enough time to get the report before the next poll starts and data will be overlapped.

Report Name: provide a name to the reports captured so they will be available for viewing, printing and exporting.

Starting Day: Type the date where the poll is going to start. Select "Every Day" is the date doesn't matter.

Polling Time: select the time you want the automatic polling to start, then select "Poll One Time" if you want to execute these poll only once or select "Poll Every…" and type the polling interval for periodic polls. For example, to poll every hour and a half select "Poll Every…" and type 90 in the Minutes field. **IMPORTANT:** Do not use straight hours as starting time (i.e. 7:00, 8:00). The flow computer calculates and updates its information at the beginning of the hour so if data is retrieved at this time it might be erroneous. Allow about 5 minutes for the flow computer to update the data.

Polling List: Add all the units you want to get data from on every poll. You can add up to 100 units. To add a unit just click "Add" and then type the unit's **Modbus** ID number.

NOTE: The file C:\AutoPoll.log will contain all the logs for the automatic poll, it will tell if there was a problem or if the data was retrieved successfully.

Historical Report Examples

Daily Report

Company Name: DFC

Meter Location: Houston

Unit No. 1

Date: 10/05/16 00:00:00

Meter ID:	orifice	orifice2
Batch Start Date:	10/05/16 00:00:00	10/05/16 00:00:00
Batch No.	27	7
Product No.	1	2
Product Name:		RP_SG
Table:	Crude SG (2004)	Refined Prod. SG (2004)
Pipe ID	3.00000	5.00000
Orifice ID	1.50000	2.00000
Density Corr. Fact.	1.00000	1.00000
K Factor	0.000	0.000

Opening	**Meter 1 Forward**		**Meter 2 Forward**	
Gross	BBL	2,442.4	Gross BBL	2,963.0
Net	BBL	2,432.3	Net BBL	2,948.8
Mass	MLB	681.42	Mass MLB	846.72
Daily				
Gross	BBL	610.2	Gross BBL	740.3
Net	BBL	607.7	Net BBL	736.8
Mass	MLB	170.21	Mass MLB	211.56

Batch Flow Weighted Average

	Meter 1 Forward	**Meter 2 Forward**
DP/Frequency	4.0000	2.0000
Temperature (Deg. F)	70.0	72.0
Pressure (PSIG)	200.0	202.0
Obv. Density (Lb/Ft3)	49.687	50.897
Densit. Temp (Deg.F)	70.0	0.0
Dansity at Base	49.893	51.141
Obv. Density (gm/cc)	0.795900	0.815300
Y Factor	1.000000	1.000000
K/CD/LMF	0.602887	0.600435
CTL	0.99465	0.99408
CPL	1.00123	1.00116
CTPL	0.99587	0.99524
Meter Density (Lb/Ft3)	49.687	50.897
SG	0.7967	0.8161
SG@60	0.8000	0.8200

Historical Report Examples - Continued

Batch Report

Company Name:	DFC			
Meter Location:	Houston			
Unit No.	1			
Meter ID:	orifice		orifice2	
Batch End Date:	10/06/16	00:00:00	10/06/16	00:00:00
Batch Start Date:	10/05/16	00:00:00	10/05/16	00:00:00
Batch No.	27		7	
Product No.	1		2	
Product Name:			RP_SG	
Table:	Crude SG (2004)		Refined Prod. SG (2004)	
Pipe ID	3.00000		5.00000	
Orifice ID	1.50000		2.00000	
Density Corr. Fact.	1.00000		1.00000	
K Factor	0.000		0.000	

Opening	**Meter 1 Forward**		**Meter 2 Forward**	
Gross	BBL	2,442.4	Gross BBL	2,963.0
Net	BBL	2,432.3	Net BBL	2,948.8
Mass	MLB	681.42	Mass MLB	846.72
Batch				
Gross	BBL	610.2	Gross BBL	740.3
Net	BBL	607.7	Net BBL	736.8
Mass	MLB	170.21	Mass MLB	211.56

Batch Flow Weighted Average

	Meter 1 Forward	**Meter 2 Forward**
DP/Frequency	4.0000	2.0000
Temperature (Deg. F)	70.0	72.0
Pressure (PSIG)	200.0	202.0
Obv. Density (Lb/Ft3)	49.687	50.897
Densit. Temp (Deg.F)	70.0	0.0
Dansityat Base	49.893	51.141
Obv. Density (gm/cc)	0.795900	0.815300
Y Factor	1.000000	1.000000
K/CD/LMF	0.602887	0.600435
CTL	0.99465	0.99408
CPL	1.00123	1.00116
CTPL	0.99587	0.99524
Meter Density (Lb/Ft3)	49.687	50.897
SG	0.7967	0.8161
SG@60	0.8000	0.8200

Historical Report Examples - Continued

Snapshot Report

Date: 10/06/16 **Time:** 18:28:30

Company Name: DFC **Meter Location:** Houston **Unit No.** 1

Meter ID:	orifice	orifice2
Batch Start Date:	10/06/16 00:00:00	10/06/16 00:00:00
Batch No.	28	8
Product No.	1	2
Product Name:		RP_SG
Table:	Crude SG (2004)	Refined Prod. SG (2004)
Pipe ID	3.00000	5.00000
Orifice ID	1.50000	2.00000
Density Corr. Fact.	1.00000	1.00000
K Factor	0.000	0.000
Equilibrium Press.	0.000	0.000
API	46.1	41.9
SG	0.7967	0.8161
SG @ 60	0.8000	0.8200

Cumulative Total	Meter 1 Forward		Meter 2 Forward	
Gross	BBL	3,522.2	GrossBBL	42.0
Net	BBL	3,507.7	Net BBL	41.8
Mass	MLB	982.66	Mass MLB	13.01

Batch Total				
Gross	BBL	469.6	GrossBBL	569.9
Net	BBL	467.7	Net BBL	567.2
Mass	MLB	131.03	Mass MLB	162.86

Flowrate	Meter 1	Meter 2
Direction	FORWARD	FORWARD
Gross BBL/HR	25.42	30.85
Net BBL/HR	25.32	30.70
Mass	7.09	8.82

	Meter 1 Instant	Meter 1 Forward	Meter 2 Instant	Meter 2 Forward
DP/Frequency	4.0000	4.0000	2.0000	2.0000
Temperature (°F)	70.0	70.0	72.0	72.0
Pressure (PSIG)	200.0	200.0	202.0	202.0
Obv. Density (Lb/Ft3)	49.687	49.687	50.897	50.897
Densit. Temp (°F)	70.0	70.0	0.0	0.0
Density at Base	49.893	49.893	51.141	51.141
Obv. Density (gm/cc)	0.795900	0.795900	0.815300	0.815300
Y Factor	1.000000	1.000000	1.000000	1.000000
K/CD/LMF	0.602887	0.602887	0.600435	0.600435
CTL	0.99465	0.99465	0.99408	0.99408
CPL	1.00123	1.00123	1.00116	1.00116
CTPL	0.99587	0.99587	0.99524	0.99524
Meter Density (Lb/Ft3)	49.687	49.687	50.897	50.897

Historical Report Examples - Continued

Last Month Daily Report

Company Name: DFC
Meter Location: Houston
Meter ID: orifice

Orifice ID:	1.50000	DP Cut off	0.0000	Tap Location	NONE
Pipe ID	3.00000	Atmos. Press.	14.6960	K Factor	0.00

Month: 10/2016

Day	Net Volume BBL	Mass MLB	Avg Sqrt HW*PF	Average DP In H2O	Avg. Pressur PSIG	Avg. Temp. DEG.F	Flowing Time
1	607.6	170.21	28.2843	4.0000	200.0	70.0	24.0000
2	607.6	170.21	28.2843	4.0000	200.0	70.0	24.0000
3	607.6	170.22	28.2843	4.0000	200.0	70.0	24.0000
4	607.6	170.21	28.2843	4.0000	200.0	70.0	24.0000
5	607.7	170.21	28.2843	4.0000	200.0	70.0	24.0000
6	472.8	132.44	28.2843	4.0000	200.0	70.0	18.6800
7	0.0	0.00	0.0000	0.0000	0.0	0.0	0.0000
8	0.0	0.00	0.0000	0.0000	0.0	0.0	0.0000
9	0.0	0.00	0.0000	0.0000	0.0	0.0	0.0000
10	0.0	0.00	0.0000	0.0000	0.0	0.0	0.0000
11	0.0	0.00	0.0000	0.0000	0.0	0.0	0.0000
12	0.0	0.00	0.0000	0.0000	0.0	0.0	0.0000
13	0.0	0.00	0.0000	0.0000	0.0	0.0	0.0000
14	0.0	0.00	0.0000	0.0000	0.0	0.0	0.0000
15	0.0	0.00	0.0000	0.0000	0.0	0.0	0.0000
16	0.0	0.00	0.0000	0.0000	0.0	0.0	0.0000
17	0.0	0.00	0.0000	0.0000	0.0	0.0	0.0000
18	0.0	0.00	0.0000	0.0000	0.0	0.0	0.0000
19	0.0	0.00	0.0000	0.0000	0.0	0.0	0.0000
20	0.0	0.00	0.0000	0.0000	0.0	0.0	0.0000
21	0.0	0.00	0.0000	0.0000	0.0	0.0	0.0000
22	0.0	0.00	0.0000	0.0000	0.0	0.0	0.0000
23	0.0	0.00	0.0000	0.0000	0.0	0.0	0.0000
24	0.0	0.00	0.0000	0.0000	0.0	0.0	0.0000
25	0.0	0.00	0.0000	0.0000	0.0	0.0	0.0000
26	0.0	0.00	0.0000	0.0000	0.0	0.0	0.0000
27	0.0	0.00	0.0000	0.0000	0.0	0.0	0.0000
28	0.0	0.00	0.0000	0.0000	0.0	0.0	0.0000
29	0.0	0.00	0.0000	0.0000	0.0	0.0	0.0000
30	0.0	0.00	0.0000	0.0000	0.0	0.0	0.0000
31	0.0	0.00	0.0000	0.0000	0.0	0.0	0.0000
Total	**3,510.90**	**983.50**	**5.4744**	**0.7742**	**38.7**	**13.5**	**138.68**

CHAPTER 3: Data Entry Through Front Panel Display

The Data entry is a menu driven type construction.

Four Keys **– ESC/Mode, Enter/Select, down arrow key, right arrow key**
These keys can be used by using a reflective object. The reflective object must be placed in front of the key to get a response.

Function

ESC/Mode Key
This key serves dual functions. In order to access the data entry, the mode key has to be activated. The mode key is on/off type key. This key will get the security code prompt, and then using select, enter key with the arrow keys to access the program. Place the reflective object on and then off for each step. Once the data menu function access is completed, exit by using the escape key.

Select/Enter Key

It is used to stop screen from scrolling, to select data entry, and accept the data configurations. It is on/off type key. Place the reflective object in front of key, and then move away before the next step.

Down Arrow Key, Right Arrow Key

Scrolling keys, the **Right Arrow Key** function is to scroll **right** way for selecting the number to be changed, and then changing the number by using **Down Arrow Key**

MAIN MENU

It consists primarily of series of topics. Your valid choices are the two Arrow Keys and select/enter key. Use Down or Right Arrow keys to make your selection and then use select/enter key. Use Esc/Mode key to go to the keyboard mode, or go back to previous mode

Go to display calibration to adjust key sensor to be more or less sensitive.

Keyboard Mode

Security Code

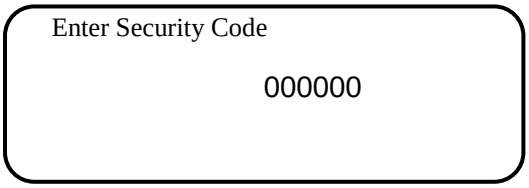

Enter the right security code to be able to change data.

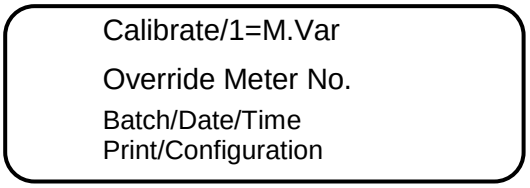

Calibrate /1=M.Var

Enter 0 to calibrate analog input 1-4, RTD, analog output 1-4, or enter '1' to calibrate multivariable.

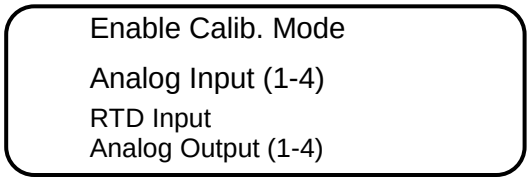

Enable Calibrate Mode

Enter '1' to enable calibrate mode. Calibration mode will set the flow computer to continue totalizing at same rate while all values are still showing live readings.

Calibrate Analog Input, RTD

0=**Offset** is a single point calibration that will offset zero and span.
1=**Full** – zero and span must be calibrated.
2=**Reset** to factory calibration.

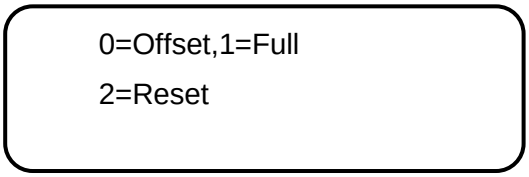

OFFSET (SINGLE POINT)

Induce the signal into the analog input, wait for 10 seconds for the reading to stabilize, then enter the offset.

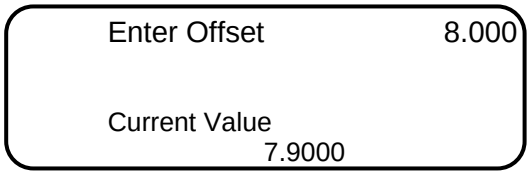

FULL (ZERO AND SPAN CALIBRATION)

4. Calibrate Low Point (4mA or 75 Ω,), induce the known live value for the low set point, and wait for 10 seconds for the reading to stabilize. Now enter in that value.

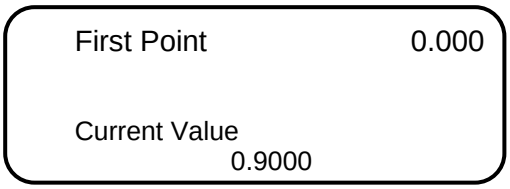

1. Calibrate High Point (20mA or 120 Ω), induce the known live value for the high set point, and then wait for 10 seconds for the reading to stabilize. Now enter in that value.

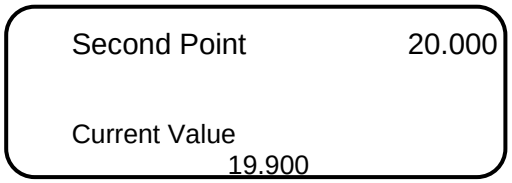

RESET (USE DEFAULT)

Enter '2' to use manufacture default.

Calibrate Analog Output

0=Offset is a single point calibration that will offset zero and span.
1=Full – zero and span must be calibrated.
2=Reset to factory calibration.

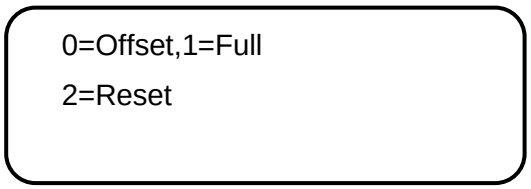

FULL (ZERO AND SPAN CALIBRATION)

1.The screen will show the minimum possible signal 4mA. Enter the live output value reading in the end device i.e. 4mA.

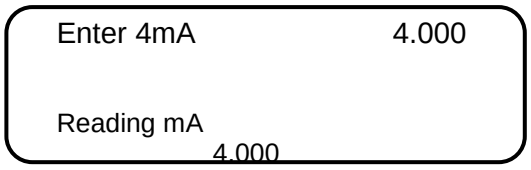

2. Now the flow computer will output full scale 20mA. Enter the live output i.e. 20mA

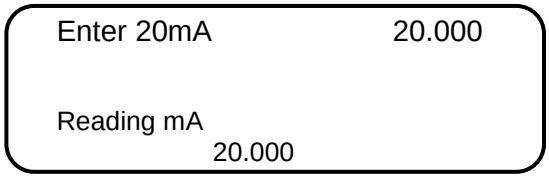

RESET (USE DEFAULT)

Enter '2' to use manufacture default.

Calibrate Multivariable

Select DP, Pressure, or Temperature to be calibrated.

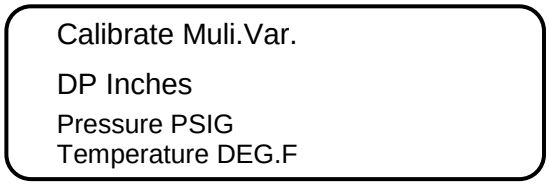

Enter the calibrate method (0=Offset, 1=Full, 2=Reset).

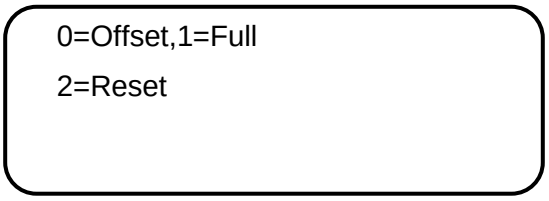

OFFSET (SINGLE POINT)

Induce the live value, then enter the offset.

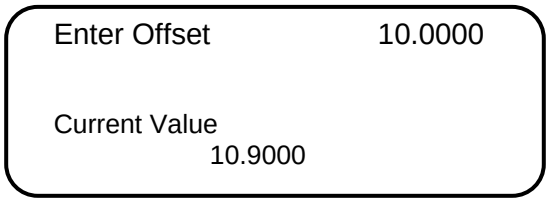

FULL (ZERO AND SPAN CALIBRATION)

1.Calibrate Low Point - induces the low range signal, and enters in that value.

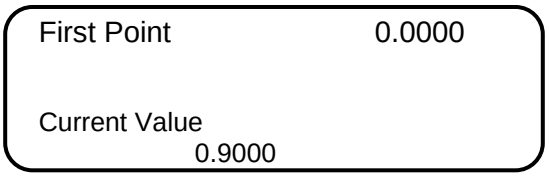

2. Calibrate High Point - induce the high range signal, and enter in that value.

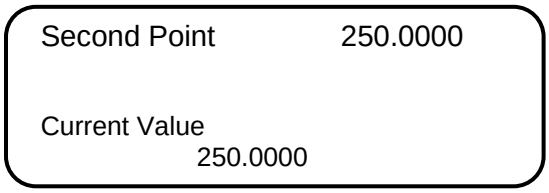

RESET (USE DEFAULT)

Enter '2' to use manufacture default.

Override Meter No.

Enter the meter number 1 or 2 to change meter override value

DEGF/PSIG/M.F.
VenturC/Wedge FA/KD2
Grav/DCF/EquP/AlpphaT
Orifice/Pipe/DP

DEGF/PSIG/M.F.

DEGF - Temperature Deg.F

This value is entered when no live temperature is available, or when a different value from the live value should be used.

PSIG – Pressure PSIG

This value is entered when no live temperature is available, or when a different value from the live value should be used.

M.F. – Meter Factor

Enter the value to change current meter factor (Frequency Device Method)

VENTURIC/WEDGE FA/KD2

Venturi C Override is the discharge coefficient for Venturi flow equations. The value is default to .9950.

Wedge Fa Override and Wedge Kd2 Override

$$\textbf{Flow Rate (GPM)} = (5.668 \, x \, F_a \, x \, K_{d2}) \times \sqrt{\frac{DP}{SG}}$$

$$DP = differential\ pressure, inches\ of\ water$$

$$SG = liquid\ specific\ gravity\ at\ flow\ conditions$$

$$F_a = Expansion\ coefficient\ of\ wedge$$

$$K_{d2} = Discharge\ coefficient\ of\ wedge$$

GRAV/DCF/EQUP/ALPHAT

Gravity Override is to replace current gravity. The gravity override is a non-retroactive gravity. It will not override the product file gravity. It only applies to the current running batch.

DCF- Density Correction Factor

Equp Override is to replace current equilibrium pressure

Alpha T Override is to replace current Alpha Tit will not affect the value in the product file. Enter number assuming that is divided by 100000. Example: .000355 = 355/1000000.

ORIFICE/PIPE/DP

Orifice ID in inches is the measured inside pipe diameter to 5 decimals at reference conditions

Pipe ID in inches is the measured diameter of the orifice at reference conditions.

DP Override in inches of water.

Batch/Date/Time

End Batch
Change Date
Change Time

END BATCH

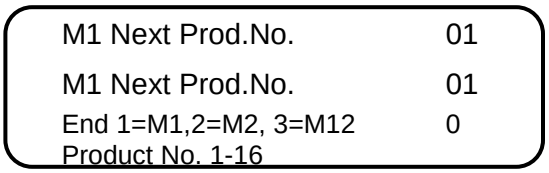

M1 Next Product Number - Enter the meter#1 product number for next batch.
M2 Next Product Number – Enter the meter#2 product number for next batch.
End Batch – Enter '1' to end meter#1, '2' to end meter#2, or '3' to end both meter batches.

CHANGE DATE

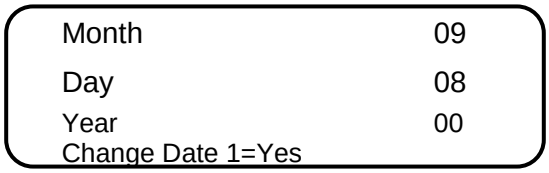

Enter Month (1-12), Day (1-31), Year(0-99) and then enter '1' to change date.

CHANGE TIME

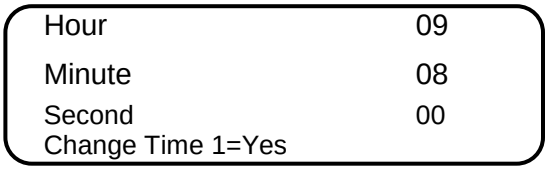

Enter Hour (0-23), Minute (0-59), Second (0-59) and then enter '1' to change time.

Print/Configuration

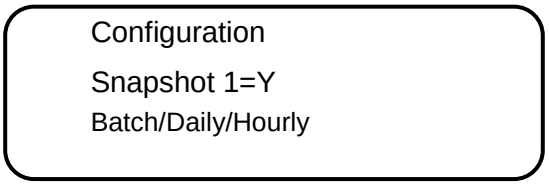

Configuration

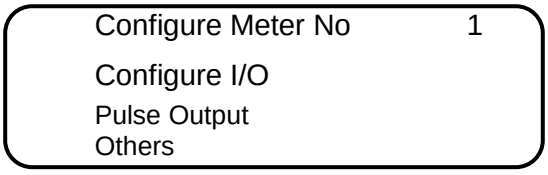

Configue Meter

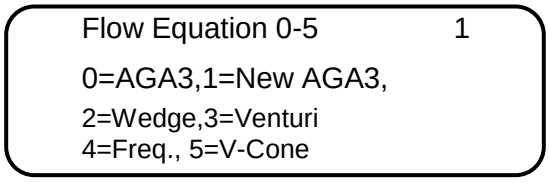

Flow Equation Type (1-6)

Selection	**Description**
1 =	API 14.3 (NEW AGA3, 1992 Orifice Equations)
2 =	Wedge Meter Flow Calculation
3 =	Venturi
4 =	Frequency Device
5 =	V-Cone
6 =	VenCone

New AGA3/Venturi/Wedge Meter

Orifice ID	10.00000
Pipe ID,	5.00000
DP Cut Off	1.0000
Viscosity	.024500

PIPE I.D. INCHES

ORIFICE ID INCHES

Pipe ID in inches is the measured inside pipe diameter to 5 decimals at reference conditions. Orifice ID in inches is the measured diameter of the orifice at reference conditions.

DP CUTOFF

The Micro MV Gas Flow Computer suspends all calculations whenever the DP, in inches of water column, is less than this value. This function is vital for suppressing extraneous data when the DP transmitter drifts around the zero mark under no-flow conditions.

VISCOSITY IN CENTIPOISE

Even though viscosity will shift with temperature and pressure changes, the effect on the calculations is negligent. Therefore using a single value is appropriate in most cases. Enter viscosity in centipoise.

WEDGE KD2

$$\textbf{Flow Rate (GPM)} = (5.668 \, x \, F_a \, x \, K_{d2}) \times \sqrt{\frac{DP}{SG}}$$

$DP = differential\ pressure, inches\ of\ water$

$SG = liquid\ specific\ gravity\ at\ flow\ conditions$

$F_a = Expansion\ coefficient\ of\ wedge$

$K_{d2} = Discharge\ coefficient\ of\ wedge$

VENTURI C

Venturi C is the discharge coefficient for Venturi flow equations. The value is default to .9950.

Frequency Device

K Factor	1000.000
F.M.Factor	1.000000
R.M.Factor	1.000000
Flow Cut Off	.024500

K FACTOR

K Factor is the number of pulses per unit volume, i.e. 1000 pulses/Unit. The meter's tag would normally indicate the K Factor.

METER FACTOR

Meter Factor is a correction to the K Factor for this individual meter, applied multiplicatively to the K factor.

FLOW CUTOFF

The Micro MV Liquid Flow Computer will quit totalizing, when frequency is below the set limit. This feature is to reduce extraneous noise appearing as data when the meter is down for period of time. The totalizer will stop totalizing when the turbine frequency is below the limit.

Configure I/O

Analog Output
Meter I/O
Status/Switch
F.C.Display

Analog Output

Ana.Out#1 Assign	1
Ana.Out#2 Assign	0
Ana.Out#3 Assign	0
Ana.Out#4 Assign	0

Assignments:

	Meter 1	Meter 2	Station
Gross Flowrate	1	5	9
Net Flowrate	2	6	10
Mass Flow Rate	3	7	11

	Meter 1	Meter2
DP	13	21
Temperature	14	22
Pressure	15	23
Density LB/FT3	16	24
Density Temperature	17	25
Density @60 – LB/FT3	18	26
DP LOW	19	27
DP HIGH	20	28
API	29	31
Specific Gravity	30	32
Density Pressure	36	37
API@60	38	39
SG@60	40	41
Meter PID	42	43
Density GM/CC	44	45

Meter-Independent Parameters	
Spare #1	33
Spare #2	34
Remote Control*	35

Note: Assignments 4, 8, and 12 are not used.

***Note: Remote control output can be controlled through the Modbus communication link.*

Examples:

3 = Mass Flow Rate, Meter #1
24 = Density, Meter #2
9 = Gross Flow Rate, Station Total

Meter I/O

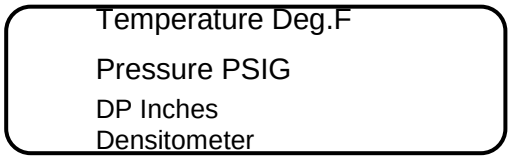

ASSIGNMENTS

0=	Not Used
1=	Analog#1
2=	Analog#2
3=	Analog#3

4=	Analog#4
5=	RTD

7 =	Dens.Freq (Not Selectable)
10 =	Multi. Variable Module #1
11 =	Multi. Variable Module #2

4MA

Enter the 4mA value for the transducer.

20MA

Enter the 20mA value for the transducer.

Status Input /Switch Output Assignment

Status/Switch#1	000
Status/Switch#2	001
Status/Switch#3	000
Status/Switch#4	000

	Assignment	Comments
1	End Meter#1 Batch	End the batch for Meter #1 and reset batch totalizer
2	End Meter#2 Batch	End the batch for Meter #2 and reset batch totalizer
3	End Meter#1/#2 Batch	End the batch for Meter#1 and #2; reset both batch totalizers
4	Alarm Acknowledge	Reset the previous occurred alarms output bit
5	Flow Direction	"Off"= forward and "ON"= reverse. For bi-directional meters
6	Spare Input #1	
7	Spare Input #2	
8	Spare Input #3	
9	Event Status	
10	Product ID Bit 0	Product ID Bits: Before ending batch, user can use status bits to select next product. These bits are read immediately at batch end. See the following table to specify a product.
11	Product ID Bit 1	
12	Product ID Bit 2	
13	Print Request	Step 1: set port 2 RTS type to 1 (Printer) Step 2: When this status is activated, the Micro MV Liquid Flow Computer will send the "Request Report" to the printer via the printer port
14	Calibration Mode	
15	Meter#2 Flow Direction	
16	Display Freeze	Set to "ON" to halt scrolling and allow for continuous monitoring
17	Display Toggle	The display will scroll as the user toggles the status

Product ID Bits

Product Bit 2	Product Bit 1	Product Bit 0	Product Number
0	0	1	= 1
0	1	0	= 2
0	1	1	= 3
1	0	0	= 4
1	0	1	= 5
1	1	0	= 6
1	1	1	= 7

Examples:

```
Assign Status Input #1                    5
Assign Status Input #2                    14
Assign Status Input #3                    15
```

User is using status input #1 to monitor the flow direction of a bi-directional meter, and is using the remaining three inputs to monitor the product ID. When Status Input #2= 0 and #3= 1 and #4= 0, then product #2 is being monitored.

Switch Output Assignment

User can assign an output to each of the Micro MV Gas Flow Computer's output switches from this list. The Micro MV Gas Flow Computer switch outputs are sourcing through switch power input power. Outputs in the top list, "Pulse Outputs", require a definition of pulse output per unit volume. Therefore a Pulse Output Width must be defined when one of these switch types are chosen. These outputs are available through switch 1 or 2 only.

Outputs in the bottom list, "Contact Type Outputs", are ON/OFF type outputs. They can be assigned to any of the four switch outputs.

Switches 1 and 2 can be pulse or contact type output; switches 3, 4 are contact-type output only.

ASSIGNMENTS - PULSE OUTPUTS

	Meter 1	Meter 2	Station
Gross	101	105	109
Net	102	106	110
Mass	103	107	111

ASSIGNMENTS – CONTACT TYPE OUTPUTS

METER #:	1	2
Batch Ended (5 sec)	113	116
Batch Preset Warn.	114	117
Batch Preset	115	118
Meter Down	120	123
Flow Low	121	124
Flow High	122	125
Temperature Low	126	136
Temperature High	127	137
Pressure Low	128	138
Pressure High	129	139
Density Low	130	140
Density High	131	141
Dens.Temp Low	132	142
Dens.Temp High	133	143
DP Low	134	144
DP High	135	145
Direction – Forward	153	155
Direction – Reverse	154	156

Meter-Independent Parameters	
Day Ended (5 seconds)	119
Dens. Period Low	146
Dens. Period High	147
Temperature Out of Range	148
Gravity Out of Range	149
Pressure Out of Range	150
Active Alarms	151
Occurred Alarms	152
Status Input #1	157
Run Switch	158
Remote Control	159
Boolean Points*	170-199

Examples:

150 = Pressure out of range

110 = Net flow rate, station total

122 = Flow rate high, Meter #1

Note - Boolean Points Assignment 170 – Boolean Point 70
Boolean Points Assignment 171 – Boolean Point 71 etc.

Flow Computer Display Assignment

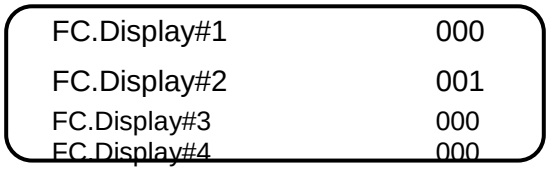

Display assignment select up to 16 assignments. The Micro MV Liquid Flow Computer will scroll through them at the assigned delay time

Assignment

4 Digit Selection, where

1st Digit: **0: Forward** **1: Reverse**
2nd Digit: **1: Meter#1** **2: Meter#2** **3: Station**
3rd and 4th Digit: **Selection** (see table below)

Selection	Description
01	Flow Rate
02	Batch Total
03	Daily Total
04	Cum. Total
05	Prev.Daily Total
06	Prev.Batch Total
07	DP/DP Low, High
08	Temperature, Pressure
09	Density, Density at Base
10	Density Freq, Dens.Period, Un-Corr. Density
11	SG,SG@60, API, API@60
12	Product
13	Cali. Mass Flow Rate
14	Date/Time
15	Alarm
16	Spare #1, Spare #2
17	Density Temperature, Density Pressure
18	Last Batch Average Temperature, Pressure, Density
19	Last Batch Average API, SG, GM/CC

Examples:

0113	Display Meter #1 Forward Previous Daily Gross Total
0104	Display Meter #1 Forward Batch Gross Total
1104	Display Meter #1 Reverse Batch Gross Total
1206	Display Meter #2 Reverse Batch Mass Total
139	Display Meter #1 Temperature

Pulse Output

Pulse Output	
#1 P/Unit#1	1.000
#2 P/Unit#2	1.000
Pulse Width	50

Pulse Output and Pulse Output Width

Pulse Output is used to activate a sampler or external totalizer. The number selected will be pulses per unit volume or per unit mass. If 0.1 pulse is selected, the one pulse will be given every 10 unit volumes has passed through the meter.

Pulse Output Width is the duration, in milliseconds, of one complete pulse cycle (where each cycle is the pulse plus a wait period, in a 50/50 ratio). For example: if POW = 500 msec, the Micro MV Liquid Flow Computer at most can produce one pulse each second regardless of the pulse per unit volume selected (500 msec pulse + 500 msec wait). If POW = 10 msec the Micro MV Liquid Flow Computer can produce up to 50 pulses per second.

The Micro MV Liquid Flow Computer's maximum pulse output is 125 pulses/sec. The Pulse Output in combination with the Pulse Output Width should be set appropriately.

Others

Day Start Hour	7
Print Interval	1440
0=Hour,1=Day,2=Min	0
Disable Alarms	0

DAY START HOUR (0-23)

Day start hour is used for daily totalizer reset operation.

PRINT INTERVALS IN MINUTES (0-1440)

When the second port (RS-232) of the Micro MV Gas Flow Computer is configured as printer port, a snapshot report is generated every print interval (i.e., every five minutes, every hour, or every ten hours).

FLOW RATE SELECTION

The flow rate will be based on hourly basis, daily, or minute.

DISABLE ALARMS

Use Disable Alarms to ignore alarms. When the alarm function is disabled alarms are not logged. Alarms are also not logged if the DP is below the cut-off limit.

Snapshot Report

If the Micro MV Liquid Flow is configured as a printer port, then enter '1' to print snapshot report

Historical Report – Batch/Daily/Hourly

No. of Reports	01
1=Latest,32=Old	
1=Batch,2=H,3=D	

NO OF REPORTS

Up to 32 previous batch data, previous 32 hours, and previous 35 days data are stored in the Micro MV Liquid Flow Computer. Enter the number of reports to be printed

1=LATEST, 32=OLDEST

Enter '1' to print the latest report, or '32' to print the oldest report.

1=BATCH, 2=HOURLY,3=DAILY

Enter '1' to start print previous batch report, '2' to start print previous hourly report, or '3' to start print previous daily report.

CHAPTER 4: FLOW EQUATIONS

API 14.3

For more information, please see *Orifice Metering of Natural Gas*, 3rd edition.

Mass Flow Rate $= \frac{\pi}{4} \times N_c \times C_d \times E_v \times d^2 \times \mathrm{Y} \times \sqrt{2DP \times Density} \times .001$

Net Flow Rate $= \frac{Mass\ Flow}{Base\ Density}$

Gross Flow Rate $= \frac{Mass\ Flow}{Flowing\ Density}$

Where:

N_c = *Units Conversion Constant*
C_d = *Orifice Plate Coefficient of Discharge*
$E_v = \frac{1}{\sqrt{1-\beta^4}}$ = *Velocity of Approach Factor*
d = *Orifice plate bore diameter*
Y = *Expansion Factor*
DP = *Orifice Differential Pressure*

	US unit
N_c	323.279
Density	lb/ft^3
Gross Flow Rate/HR	MCF
Net Flow Rate/HR	MSCF
Mass Flow Rate/HR	MLB

Wedge

$$\text{Gross Flowrate} = 5.668 \times 60.0 \times F_a \times K_{d2} \times \sqrt{\frac{DP}{SG}}$$
$$= \text{Gal/Hr}$$

$$\text{Net Flowrate} = \frac{Gross\ Flowrate \times Flowing\ Density}{Density@60°F}$$
$$= \text{Gal/Hr}$$

$$\text{Mass Flowrate} = Gross\ Flowrate \times Flowing\ Density \times Conversion\ Factor$$
$$= \text{MLb/Hr}$$

Where $DP = Differential\ Pressure, inches\ of\ water$
$SG = Liquid\ Specific\ Gravity\ at\ flowing\ conditions$
$F_a = Flow\ Expansion\ Factor\ (Data\ Entry)$
$K_{d2} = Flow\ Coefficient\ (Data\ Entry)$

Venturi

$$\textbf{Mass Flowrate} = 0.0997424 \times 3.6 \times \sqrt{\rho \times DP} \times \frac{C \times Y \times F_a \times d^2}{\sqrt{1-\beta^4}}$$

$$= \textbf{(MLb/Hr)}$$

$$\textbf{Net Flowrate} = \frac{Mass\ Flowrate\ (Lb/Hr)}{Reference\ \ Density}$$

$$= \textbf{(CF/Hr)}$$

$$\textbf{Gross Flowrate} = \frac{Mass\ Flowrate\ (Lb/Hr)}{Flowing\ \ \ Density}$$

$$= \textbf{(CF/Hr)}$$

$$Where \quad C = discharge\ coefficien\ t\ C\ (manual\ entry)$$

$$Y = expansion\ \ factor$$

$$\beta = \frac{d}{D} = \frac{venturi\ \ bore\ diameter\ \ at\ reference}{meter\ tube\ internal\ \ diameter\ \ at\ reference}$$

$$\rho = density\ of\ \ the\ \ fluid\ \ at\ \ flowing\ \ conditions$$

$$DP = differenti\ al\ \ pressure$$

(Refer to **Miller Measurement Engineering Handbook**)

Frequency Device

Gross Pulse

Standard Net Flow Includes Meter Factor

Gross Flow Per Hour (UM)

$$\frac{Gross\ Pulses\ per\ Second}{K\ Factor\ (UM)} \times Conversion\ Factor \times 3600$$

Net Standard Flow Per Hour (UM)

$$\frac{Gross\ Flow \times FlowingDensity \times LMF}{Density@60^{\circ}F}$$

Mass Flow Per Hour (MLB)

$$Gross\ Flow \times Flowing\ Density \times Conversion\ Factor$$

Gross Flow Includes Meter Factor

Gross Flow Per Hour (UM)

$$\frac{Gross\ Pulses\ per\ Second}{K\ Factor} \times LMF \times ConversionFactor \times 3600$$

Net Standard Flow Per Hour (UM)

$$\frac{Gross\ Flow \times Flowing\ Density}{Density@60^{\circ}F}$$

Mass Flow Per Hour (MLB)

$$\frac{Gross\ Pulses\ per\ Second}{K\ Factor} \times Flowing\ Density \times Conversion\ Factor$$

Mass Pulse

Mass Flow Per Hour (MLB)

$$\frac{Mass\ Pulses\ per\ Second}{K\ Factor\ (LB)} \times 3.6$$

Net Standard Flow Per Hour (UM)

$$\frac{Mass\ Flow}{Density@60^{\circ}F} \times Conversion\ Factor$$

Gross Flow Per Hour (UM)

Gross Flow Includes Meter Factor

$$\frac{Mass\ Flow}{Flowing\ Density} \times LMF \times Conversion\ Factor$$

No Meter Factor in Gross Flow

$$\frac{Mass\ Flow}{Flowing\ Density \times LMF} \times Conversion\ Factor$$

Note:

UM=Unit of Measurement BBL,GAL,CF, MCF. (Selectable by Data Entry)
Density in LB/CF
LMF = Linear Factor × Meter Factor

Cone/Smart Cone

$$\text{Mass Flowrate} = \frac{\pi}{4} \times \sqrt{2g_c \times \rho} \times \frac{D^2 \times \beta^2}{\sqrt{1-\beta^4}} \times Cf \times Y \times \sqrt{Psf} \times Fa$$

$$= \boldsymbol{q_{mass/second}}\ (LB-US, KG-Metric)$$

$$\text{Net Flowrate} = \frac{q_{mass}}{\rho_{reference}}$$

$$\text{Gross Flowrate} = \frac{q_{mass}}{\rho_{flowing}}$$

Where:

g_c = Dimensional Conversion Constant

C_f = Flow Coefficient of the Meter

ρ = Density (LB/FT3)

D = Meter Inside Diameter (Feet)

Psf = D.Pressure(Pounds force per square foot)

Y = Adiabatic Expansion Factor for Contoured Elements

$\beta = \sqrt{1 - \frac{d^2}{D^2}}$

d = Cone Diameter, D=Meter Inside Diameter (Inches)

Fa = Thermal Expansion Factor

DENSITY EQUATIONS

Sarasota Density GM/CC

Sarasota density is calculated using the frequency signal produced by a Sarasota densitometer, and applying temperature and pressure corrections as shown below.

$$\textbf{Corrected Density} = DCF \times \frac{2D_0(t\text{-}T_{0p})}{T_{0p} \times \frac{1 + K(t\text{-}T_{0p})}{2T_{0p}}}$$

Where:

$T_{0p} = T_{coef} \times (T - T_{cal}) + P_{coef} \times (P - P_{cal}) + T_0$

DCF = *Density Correction Factor*

D_0 = *Calibration constant, mass/volume, gm/cm*^{3}

t = *Densitometer oscillation period in microseconds.*

t_0 = *A calibration constant in microseconds*

T_{coef} = *Temperature coefficient in microseconds/°F*

P = *Flowing pressure in PSIG*

P_{coef} = *Pressure coefficient in microseconds/PSIG*

P_{cal} = *Calibration pressure in PSIG*

UGC Density GM/CC

UGC density is calculated using the frequency signal produced by a UGC densitometer, and applying temperature and pressure corrections as shown below

$$\textbf{Corrected Density} = DCF \times P_{flowing}\{[K(P_{off}+d)\times 10^{-6}]+[K_T(T_{flowing}-T_{cal})] + d\}$$

Where:

$$d = K_0 + K_1 t + K_2 t^2$$

K_0, K_1, K_2 = *Calibration Constants*

t = *Densitometer oscillation period in microseconds*

DCF = *Density Correction Factor*

K = *Pressure Constant*

P_{off} = *Pressure Offset*

K_T = *Temperature Coefficient*

T_{cal} = *Temperature coefficient in microseconds/°F*

Solartron Density GM/CC

Solartron density is calculated using the frequency signal produced by a Solartron densitometer, and applying temperature and pressure corrections as shown below.

Density at 68°F and 0 PSIG

$$D = K_0 + K_1 t + K_2 t^2$$

$$\text{Where} \quad t = \text{Densitometer Oscillation Period in microseconds}$$

$$K_0, K_1, K_2 = \text{Calibration Constants Supplied by Solartron}$$

Temperature Corrected Density

$$DT = D[1 + K_{18}(T\text{-}68)] + K_{19}(T\text{-}68)$$

$$\text{Where } T = \text{Temperature in } °F$$

Temperature and Pressure Corrected Density

$$DP = DL(1 + K_{20}P) + K_{21}P$$

Where :

$$P = \text{Pressure in PSIG}$$

$$K_{20} = K_{20A} + K_{20B}P$$

$$K_{21} = K_{21A} + K_{21B}P$$

$$K_{20A}, K_{20B}, K_{21A}, K_{21B} = \text{Calibration Constants Supplied by Solarton}$$

Additional Equation for Velocity of Sound Effects

The following equation can provide more accurate measurement for LPG products in the density range of $0.300 \le D \le 0.550$ (D is in gm/cc). ***Contact Solartron to get information about KR and KJ constants.***

$$D_{vos} = DP + K_r (DP - K_j)^3$$

$$\text{Let } K_r = 0.0 \text{ outside this range.}$$

UGC2 Density GM/CC

UGC density is calculated using the frequency signal produced by a UGC densitometer, and applying temperature and pressure corrections as shown below

$$\text{Corrected Density} = DCF \times \{[P_{flowing} x (KP1 + d \times KP2)] + [(KT1 + dxKT2) x (T_{flowing} - T_{cal})] + d\}$$

Where:

$d = K_0 + K_1 t + K_2 t^2$

K_0, K_1, K_2 = *Calibration Constants*

t = *Densitometer oscillation period in microseconds*

DCF = *Density Correction Factor*

$KP1, KP2$ = *Pressure Constants*

$KT1, KT2$ = *Temperature Coefficients*

T_{cal} = *Temperature coefficient in microseconds/°F*

Propylene Density

Density at flowing Temperature and pressure is calculated using API Chapter 11.3.3.2 (API 2565)

Temperature Range	20–165 °F
Pressure Range	Saturation–1600 PSIA

Ethylene Density

Ethylene density is calculated using API Chapter 11.3.3.2

Temperature Range	65–167 °F
Pressure Range	200–2100 PSIA

NBS 1045

Temperature Range	-272.5–260 °F
Pressure Range	0–5801 PSIA

NIST14

Temperature Range	24–200°F
Pressure Range	250–2920 PSIA

DENSITY EQUATIONS (Without Live Densitometer)

If API Table is selected:

$$Flowing\ Density\ (Meter\ Density) = Density@60°F \times CTPL$$

API2004
Temperature, Pressure and Density Limits for Crude Oil, Refined Products, Lubricating Oils

	Crude Oil	Refined Products	Lubricating Oils
Density, kg/m³@ 60°F	***610.6 to 1163.5***		***800.9 to 1163.5***
Relative Density @ 60°F	0.61120 to 1.16464		0.80168 to 1.1646
API Gravity @ 60°F	100.0 to -10.0		45.0 to -10.0
Kg/m³@ 15°C	611.16 to 1163.79	611.16 to 1163.86	801.25 to 1163.85
Kg/m³@20°C	606.12 to 1161.15	606.12 to 1160.62	798.11 to 1160.71
Temperature, °C	***-50.00 to 150.00***		
°F	-58.0 to 302.0		
Pressure, psig	***0 to 1,500***		
kPa (gauge)	0 to $1.034x10^4$		
Bar (gauge)	0 to 103.4		
α_{60},per °F	***$230.0x10^{-6}$ to $930.0x10^{-6}$***		
per °C	$414.0x10^{-6}$ to $1674.0x10^{-6}$		

(**Refer to Manual of Petroleum Measurement Standards Chapter 11-Physical Properties Data**)

CHAPTER 5: MODBUS DATA

MODBUS PROTOCOL

TRANSMISSION MODE

	ASCII	RTU
DATA BITS	7	8
START BITS	1	1
PARITY	EVEN,ODD	NONE
STOP BITS	1	1
ERROR CHECKING	LRC	CRC
BAUD RATE	1200-9600	1200-9600

ASCII FRAMING

Framing is accomplished by using colon (:) character indicating the beginning of frame and carriage (CR), line feed (LF) for the end of frame

ASCII MESSAGE FORMAT

	ADDRESS	FUNCTION	DATA	ERR\CHECK		
:	2 CHAR	2 CHAR	Nx2 CHAR	2 CHAR	CR	LF
8 BITS	16 BITS	16 BITS	Nx16 BITS	16 BITS	8 BITS	8 BITS

RTU FRAMING

Frame synchronization is done by time basis only. The Smart Flow Computer allows 3.5 characters time without new characters coming in before proceeding to process the message and resetting the buffer.

RTU MESSAGE FORMAT

ADDRESS	FUNCTION	DATA	CRC
8 BITS	8 BITS	Nx8 BITS	16 BITS

FUNCTION CODE

To inform the slave device of what function to perform

FUNCTION CODE	ACTION
01	
03	Read Strings or Multiple 16 Bits
16	Write Strings or Multiple 16 Bits

ERROR CHECK

LRC MODE

The LRC check is transmitted as two ASCII hexadecimal characters. First, the message has to be stripped of the :, LF, CR, and then converted the HEX ASCII to Binary. Add the Binary bits and then two's complement the result.

CRC MODE

The entire message is considered in the CRC mode. Most significant bit is transmitted first. The message is pre-multiplied by 16. The integer quotient digits are ignored and the 16-bit remainder is appended to the message as the two CRC check bytes. The resulting message including the CRC, when divided by the same polynomial (X16+X15+X2+1) at the receiver which will give zero remainder if no error has occurred.

EXCEPTION RESPONSE

Exception response comes from the slave if it finds errors in communication. The slave responds to the master echoing the slave address, function code (with high bit set), exception code and error check. To indicate that the response is notification of an error, the high order bit of the function code is set to 1.

EXCEPTION CODE	DESCRIPTION
01	Illegal Function
02	Illegal Data Address
03	Illegal Data Value

BROADCAST COMMAND

All units listen to Unit ID Zero, and none will respond when that write function is broadcasted.

MODBUS EXAMPLES

*FUNCTION CODE 03 **(Read Single or Multiple Register Points)***

Each Modbus System has a different Modbus address range. For example, 40000 or 90000 is the high level message generated through the host Modbus system. The set up and offset are different for each host Modbus system.

READ A SHORT (SINGLE) WORD NUMERIC VARIABLE

The short word numeric variable is a 16-bit integer
Data: 16 bits (short word: two 8-bit bytes- high byte, low byte),
Short Integer Variable Modbus Address: from 2534 to 3030

RTU MODE

Read Address 3001

ADDR	FUNC CODE	STARTING POINT		# OF POINTS		CRC CHECK	
		HI	LO	HI	LO		
01	03	0B	B9	00	01	57	CB

Response - Data - 02 63 (Hex), 611 (Decimal)

ADDR	FUNC CODE	BYTE COUNTS	DATA		CRC CHECK	
			HI	**LO**		
01	03	02	**02**	**63**	F9	0D

ASCII MODE
Read Address 3076

ADDR		FUNC CODE		STARTING POINT				# OF POINTS				LRC CHECK			
				HI		LO		HI		LO					
:	30	31	30	33	30	43	30	43	30	30	30	31	45	42	CR	LF

Response

ADDR		FUNC CODE		BYTE COUNT		DATA				LRC CHECK			
						HI		LO					
:	30	31	30	33	30	32	30	30	30	31	46	39	CR	LF

READ A LONG WORD NUMERIC VARIABLE

The long word numeric variable is a *two 16-bit integers* with decimal places inferred
Data: two 16-bit (32 bits, two words: high word, low word).
Sign bit - first bit of high word (0:positive, 1:negative)
Long Integer Variable Modbus Address: from 3131 to 9665

Read Address 3131

ADDR	FUNC CODE	STARTING Address		# OF Registers		CRC CHECK	
		HI	LO	HI	LO		
01	03	0C	3B	00	**02**	B6	96

Response - Data - **4 Bytes - 00 05 6A 29 (Hex), 611 (Decimal)**

ADDR	FUNC CODE	BYTE COUNTS	**DATA**				CRC CHECK	
			HI Word		**LO Word**			
01	03	04	**00**	**05**	**6A**	**29**	05	4C

Data Bytes - 00 05 6A 29 (Hex) = 354857 (decimal)
Data with 2 decimal places inferred = 3548.57

For Example:
Honeywell Modbus system - read address **93131**
Delta-V Modbus system - read address **43131**
Data Calculation
Value = High Word x 65536 + Low Word
High Word = 00 05 (Hex), 5 (Decimal)
Low Word = 6A 29 (Hex), 27177 (Decimal)
= 5 x 65536 + 27177
= 354857
Two decimal places inferred
= 3548.57

READ A FLOATING POINT VARIABLE

The floating point variable is a single precision floating point value. The format can be configured as

Number of Bytes

Selection	Description
4 Bytes	One Register - 4 Bytes
2 Bytes	Two Registers – 4 Bytes

Bytes Order

Selection	Description
HI, LO	Data - 4 Bytes HI HI LO LO
LO, HI	Data - 4 Bytes LO LO HI HI

IEEE Floating Point Format

Sign	Exponent	Mantissa
1 bit	8 bits	23 bits

Byte 3	Byte 2	Byte 1	Byte 0
SEEEEEEE	EMMMMMMM	MMMMMMMM	MMMMMMMM

Modbus Address: From 7001 to 7999

Example: Read one register with 4 data bytes (High and Low words)

Read Register 7047

ADDR	FUNC CODE	STARTING Address		# OF Registers		CRC CHECK	
		HI	LO	HI	LO		
01	03	1B	87	00	**01**	32	C7

Response - Four Data Bytes - **47 6C 4A 00 (HEX) = 60490.0**

ADDR	FUNC CODE	BYTE COUNTS	**DATA**				CRC CHECK	
			HI Word		**LO Word**			
01	03	04	**47**	**6C**	**4A**	**00**	19	FA

Modbus Address Table – 16 Bits Integer

ADDRESS	DESCRIPTION	DECIMAL	READ/WRITE
2534	Flow Computer Display Delay	0 Inferred	Read/Write
2535	Flow Computer Assignment #1	0 Inferred	Read/Write
2536	Flow Computer Assignment #2	0 Inferred	Read/Write
2537	Flow Computer Assignment #3	0 Inferred	Read/Write
2538	Flow Computer Assignment #4	0 Inferred	Read/Write
2539	Flow Computer Assignment #5	0 Inferred	Read/Write
2540	Flow Computer Assignment #6	0 Inferred	Read/Write
2541	Flow Computer Assignment #7	0 Inferred	Read/Write
2542	Flow Computer Assignment #8	0 Inferred	Read/Write
2543	Flow Computer Assignment #9	0 Inferred	Read/Write
2544	Flow Computer Assignment #10	0 Inferred	Read/Write
2545	Flow Computer Assignment #11	0 Inferred	Read/Write
2546	Flow Computer Assignment #12	0 Inferred	Read/Write
2547	Flow Computer Assignment #13	0 Inferred	Read/Write
2548	Flow Computer Assignment #14	0 Inferred	Read/Write
2549	Flow Computer Assignment #15	0 Inferred	Read/Write
2550	Flow Computer Assignment #16	0 Inferred	Read/Write
2551	Flow Computer ID	0 Inferred	Read/Write
2552	reserved		
2553	Port 1 Modbus Type (0=RTU,1=ASCII)	0 Inferred	Read/Write
2554	Port 1 Parity(0=None,1=Odd,2=Even)	0 Inferred	Read/Write
2555	Port 1 Baud Rate(0=1200,1=2400,2=4800,3=9600)		
2556	reserved		
2557	Port 1 RTS Delay in Milliseconds	0 Inferred	Read/Write
2558-2559	reserved		
2560	Port 2 Type (0=Modbus, 1=Printer)	0 Inferred	Read/Write
2561	Port 2 Modbus Type (0=RTU,1=ASCII)	0 Inferred	Read/Write
2562	Port 2 Parity(0=None,1=Odd,2=Even)	0 Inferred	Read/Write
2563	Port 2 Baud Rate(0=1200,1=2400,2=4800,3=9600)		

Modbus Address Table– 16 Bits Integer

ADDRESS	DESCRIPTION	DECIMAL	READ/WRITE
2564	Printer Baudrate(0=1200,1=2400,3=4800,4=9600)		
2565	Port 2 RTS Delay in Milliseconds	0 Inferred	Read/Write
2566	Printer-Number of Nulls	0 Inferred	Read/Write
2567	Spare		
2568	Flow Direction Selection	0 Inferred	Read/Write
2569	Meter Bank 0=One Meter,1=Two Meters	0 Inferred	Read/Write
2570	Select 0=Single, 1=Dual Streams	0 Inferred	Read/Write
2572	Meter#1 Use Stack DP 0=No,1=Yes	0 Inferred	Read/Write
2573	Meter#2 Use Stack DP 0=No,1=Yes	0 Inferred	Read/Write
2574	Common Temperature 1=Yes	0 Inferred	Read/Write
2575	Common Pressure 1=Yes	0 Inferred	Read/Write
2576	Density#1 0=None,1=4-20mA,2=S,3=U,3=S	0 Inferred	Read/Write
2577	Density#1 Unit 0=SG,1=API,2=Density	0 Inferred	Read/Write
2578	Use Meter Temp as Dens.Temp#1 0=N,1=Y	0 Inferred	Read/Write
2579	Use Meter Pressure as Dens.Press 1=Yes	0 Inferred	Read/Write
2580	Common Density	0 Inferred	Read/Write
2581	Density#2 0=None,1=4-20mA,2=S,3=U,3=S	0 Inferred	Read/Write
2582	Density#2 Unit 0=SG,1=API,2=Density	0 Inferred	Read/Write
2583	Use Meter Temp#2 as Dens.Temp (1=Yes)	0 Inferred	Read/Write
2584	Use Meter#2 Pressure as Dens Pressure (1=Yes)	0 Inferred	Read/Write
2585-2588	Spare		
2589	Scale Selection (0=32767,1=4095)	0 Inferred	Read/Write
2590-2592	Spare		
2593	Flow Rate Display	0 Inferred	Read/Write
2594	Flow Rate Averaged Second	0 Inferred	Read/Write
2595	Day Start Hour (0-23)	0 Inferred	Read/Write
2596-2605	Company Name	20 Chars	Read/Write
2606	Disable Alarms ? (0=No, 1=Yes)	0 Inferred	Read/Write
2607	Print Interval in Minutes (0-1440)	0 Inferred	Read/Write
2608	Run Switch Delay	0 Inferred	Read/Write
2609	Pulse Width	0 Inferred	Read/Write
2610	Batch Type 0=Daily,1=On Demand,2=Time	0 Inferred	Read/Write
2611	Disable Batch Preset (0=No,1=Yes)	0 Inferred	Read/Write
2612	Meter #1 Next Batch Product ID or No.	0 Inferred	Read/Write
2613	Meter #2 Next Batch Product ID or No.	0 Inferred	Read/Write
2614	Enable Batch Schedule(1=Yes)	0 Inferred	Read/Write
2615-2616	Spare		
2617	Status Input/Switch Output #1 (0=OFF,1=ON)	0 Inferred	Read/Write
2618	Status Input/Switch Output #2 (0=OFF,1=ON)	0 Inferred	Read/Write
2619	Status Input/Switch Output #3 (0=OFF,1=ON)	0 Inferred	Read/Write
2620	Status Input/Switch Output #4 (0=OFF,1=ON)	0 Inferred	Read/Write
2621	Meter#1 Flow Direction Manual Entry	0 Inferred	Read/Write
2622	Meter#2 Flow Direction Manual Entry	0 Inferred	Read/Write
2623	Enable Battery Alarm (1=Y)	0 Inferred	Read/Write
2624-2633	Meter Location	20 Chars.	Read/Write
2634-2637	Meter #1 ID	8 Chars.	Read/Write

Modbus Address Table– 16 Bits Integer

ADDRESS	DESCRIPTION	DECIMAL	READ/WRITE
2638	Disable Interval Report (1=Yes)	0 Inferred	Read/Write
2639	Meter#1 Volume Units 0=BBL, 1=GAL	0 Inferred	Read/Write
2640-2643	Meter #2 ID		
2644	Use Analog Input 5-9 (1=Yes)	0 Inferred	Read/Write
2645	Meter#2 Volume Units 0=BBL, 1=GAL	0 Inferred	Read/Write
2646	Meter#1 Flow Cut Off	0 Inferred	Read/Write
2647	Meter#2 Flow Cut Off	0 Inferred	Read/Write
2648	Spare		
2649-2651	Reserved		
2652-2659	Product #1 Name	16 Chars.	Read/Write
2660	Product #1 Table Select	0 Inferred	Read/Write
2661-2668	Product #2 Name	16 Chars.	Read/Write
2669	Product #2 Table Select	0 Inferred	Read/Write
2670-2677	Product #3 Name	16 Chars.	Read/Write
2678	Product #3 Table Select	0 Inferred	Read/Write
2679-2686	Product #4 Name	16 Chars.	Read/Write
2687	Product #4 Table Select	0 Inferred	Read/Write
2688-2695	Product #5 Name	16 Chars	Read/Write
2696	Product #5 Table Select	0 Inferred	Read/Write
2697-2704	Product #6 Name	16 Chars.	Read/Write
2705	Product #6 Table Select	0 Inferred	Read/Write
2706-2713	Product #7 Name	16 Chars.	Read/Write
2714	Product #7 Table Select	0 Inferred	Read/Write
2715-2722	Product #8 Name	16 Chars.	Read/Write
2723	Product #8 Table Select	0 Inferred	Read/Write
2724-2731	Product #9 Name	16 Chars.	Read/Write
2732	Product #9 Table Select	0 Inferred	Read/Write
2733-2740	Product 10 Name	16 Chars.	Read/Write
2741	Product 10 Table Select	0 Inferred	Read/Write
2742-2749	Product 11 Name	16 Chars.	Read/Write
2750	Product 11 Table Select	0 Inferred	Read/Write
2751-2758	Product 12 Name	16 Chars.	Read/Write
2759	Product 12 Table Select	0 Inferred	Read/Write
2760-2767	Product 13 Name	16 Chars.	Read/Write
2768	Product 13 Table Select	0 Inferred	Read/Write
2769-2776	Product 14 Name	16 Chars.	Read/Write
2777	Product 14 Table Select	0 Inferred	Read/Write
2778-2785	Product 15 Name	16 Chars.	Read/Write
2786	Product 15 Table Select	0 Inferred	Read/Write
2787-2794	Product 16 Name	16 Chars.	Read/Write
2795	Product 16 Table Select	0 Inferred	Read/Write
2796-2797	Spare		
2798	Meter #1 DP Low Assignment	0 Inferred	Read/Write
2799	Meter #1 Temperature Assignment	0 Inferred	Read/Write
2800	Meter #1 Pressure Assignment	0 Inferred	Read/Write
2801	Meter #1 Density Assignment	0 Inferred	Read/Write
2802	Meter #1 Density Temp. Assignment	0 Inferred	Read/Write
2803	Meter #1 DP High Assignment	0 Inferred	Read/Write
2804	Meter #2 DP Low Assignment	0 Inferred	Read/Write

Modbus Address Table– 16 Bits Integer

ADDRESS	DESCRIPTION	DECIMAL	READ/WRITE
2805	Meter #2 Temperature Assignment	0 Inferred	Read/Write
2806	Meter #2 Pressure Assignment	0 Inferred	Read/Write
2807	Meter #2 Density Assignment	0 Inferred	Read/Write
2808	Meter #2 Density Temp. Assignment	0 Inferred	Read/Write
2809	Meter #2 DP High Assignment	0 Inferred	Read/Write
2810	Spare #1 Assignment	0 Inferred	Read/Write
2811	Spare #2 Assignment	0 Inferred	Read/Write
2812	Meter #1 DP Fail Code	0 Inferred	Read/Write
2813	Meter #1 Temperature Fail Code	0 Inferred	Read/Write
2814	Meter #1 Pressure Fail Code	0 Inferred	Read/Write
2815	Meter #1 Density/Gravity Fail Code	0 Inferred	Read/Write
2816	Meter #1 Density Temp Fail Code	0 Inferred	Read/Write
2817	Spare		
2818	Meter #2 DP Fail Code	0 Inferred	Read/Write
2819	Meter #2 Temperature Fail Code	0 Inferred	Read/Write
2820	Meter #2 Pressure Fail Code	0 Inferred	Read/Write
2821	Meter #2 Density/Gravity Fail Code	0 Inferred	Read/Write
2822	Meter #2 Density Temp Fail Code	0 Inferred	Read/Write
2823	Spare		
2824	Spare #1 Failure Code	0 Inferred	Read/Write
2825	Spare #2 Failure Code	0 Inferred	Read/Write
2826	Port 3 (Second Port) 0=Read/Wirte, 1=Read only)	0 Inferred	Read/Write
2827	Analog Output #1 Assign	0 Inferred	Read/Write
2828	Analog Output #2 Assign	0 Inferred	Read/Write
2829	Analog Output #3 Assign	0 Inferred	Read/Write
2830	Analog Output #4 Assign	0 Inferred	Read/Write
2831	Mass Units Selection (0=MLB,1=LB) (available version 11.00.00 or later)		
2832	Meter #1 Calculation Type	0 Inferred	Read/Write
2833	Meter #2 Calculation Type	0 Inferred	Read/Write
2834	Meter#1 Y Factor Selection	0 Inferred	Read/Write
2835	Meter#1 Tap (0=Flange,1=Pipe)	0 Inferred	Read/Write
2836	Meter#1 Y Factor Selection	0 Inferred	Read/Write
2837	Meter#1 Tap (0=Flange,1=Pipe)	0 Inferred	Read/Write
2838	Meter #1 Gross Flow Include Meter Factor	0 Inferred	Read/Write
2839	Meter #2 Gross Flow Include Meter Factor	0 Inferred	Read/Write
2840	Spare		
2841-2844	Analog Input #1 Tag	8 Chars.	Read/Write
2845-2848	Analog Input #2 Tag	8 Chars.	Read/Write
2849-2852	Analog Input #3 Tag	8 Chars.	Read/Write
2853-2856	Analog Input #4 Tag	8 Chars.	Read/Write
2857-2860	RTD Input Tag	8 Chars.	Read/Write
2861-2864	Densitometer Tag	8 Chars.	Read/Write
2865-2868	Analog Output #1 Tag	8 Chars.	Read/Write
2869-2872	Analog Output #2 Tag	8 Chars.	Read/Write
2873-2876	Analog Output #3 Tag	8 Chars.	Read/Write
2877-2880	Analog Output #4 Tag	8 Chars.	Read/Write
2881-2900	Spare		
2901-2904	Analog Input #5 Tag	8 Chars.	Read/Write
2905-2908	Analog Input #6 Tag	8 Chars.	Read/Write
2909-2912	Analog Input #7 Tag	8 Chars.	Read/Write
2913-2916	Analog Input #8 Tag	8 Chars.	Read/Write

Modbus Address Table– 16 Bits Integer

ADDRESS	DESCRIPTION	DECIMAL	READ/WRITE
2917-2920	Analog Input #9 Tag	8 Chars.	Read/Write
2921-2933	Spare		
2933	Status Input/Switch Output #1 Assign	0 Inferred	Read/Write
2934	Status Input/Switch Output #2 Assign	0 Inferred	Read/Write
2935	Status Input/Switch Output #3 Assign	0 Inferred	Read/Write
2936	Status Input/Switch Output #4 Assign	0 Inferred	Read/Write
2937	Activiate Backlight Start Hour (0-23)	0 Inferred	Read/Write
2938	Backlight On Timer in Hours	0 Inferred	Read/Write
2939	Backlignt Mode	0 Inferred	Read/Write
2940-2942	Spare		
2943	Meter#1 Density Pressure Assignment	0 Inferred	Read/Write
2944	Meter#2 Density Pressure Assignment	0 Inferred	Read/Write
2945	Meter#1 Density Pressure Fail Code	0 Inferred	Read/Write
2946	Meter#2 Density Pressure Fail Code	0 Inferred	Read/Write
2947	Spring Forward Month	0 Inferred	Read/Write
2948	Spring Forward Day	0 Inferred	Read/Write
2949	Fall Back Month	0 Inferred	Read/Write
2950	Fall Back Day	0 Inferred	Read/Write
2951	Enable Daylight Time Saving	0 Inferred	Read/Write
2952-2956	Spare		
2957	Meter #1 Select Mass Pulse Input (1=Yes)	0 Inferred	Read/Write
2958	Meter #2 Select Mass Pulse Input (1=Yes)	0 Inferred	Read/Write
2959	Meter #1 Retroactive Meter Factor	0 Inferred	Read/Write
2960	Meter #2 Retroactive Meter Factor	0 Inferred	Read/Write
2961-2964	Multi.Var#1 DP Tag	8 Chars.	Read/Write
2965-2968	Multi.Var#1 Pressure Tag	8 Chars.	Read/Write
2969-2972	Multi.Var#1 Temperature Tag	8 Chars.	Read/Write
2973-2976	Multi.Var#2 DP Tag	8 Chars.	Read/Write
2977-2980	Multi.Var#2 Pressure Tag	8 Chars.	Read/Write
2981-2984	Multi.Var#2 Temperature Tag	8 Chars.	Read/Write
2985	Analog Output #1 Remote Control (0-100)	0 Inferred	Read/Write
2986	Analog Output #2 Remote Control (0-100)	0 Inferred	Read/Write
2987	Analog Output #3 Remote Control (0-100)	0 Inferred	Read/Write
2988	Analog Output #4 Remote Control (0-100)	0 Inferred	Read/Write
2989-2990	Spare		
2991	Reset PID	0 Inferred	Read/Write

Modbus Address Table– 16 Bits Integer

ADDRESS	DESCRIPTION	DECIMAL	READ/WRITE
2917-2920	Analog Input #9 Tag 8 Chars.	Read/Write	
2921-2933	Spare		
2933	Status Input/Switch Output #1 Assign	0 Inferred	Read/Write
2934	Status Input/Switch Output #2 Assign	0 Inferred	Read/Write
2935	Status Input/Switch Output #3 Assign	0 Inferred	Read/Write
2936	Status Input/Switch Output #4 Assign	0 Inferred	Read/Write
2937	Activiate Backlight Start Hour (0-23)	0 Inferred	Read/Write
2938	Backlight On Timer in Hours	0 Inferred	Read/Write
2939	Backlignt Mode	0 Inferred	Read/Write
2940-2942	Spare		
2943	Meter#1 Density Pressure Assignment	0 Inferred	Read/Write
2944	Meter#2 Density Pressure Assignment	0 Inferred	Read/Write
2945	Meter#1 Density Pressure Fail Code	0 Inferred	Read/Write
2946	Meter#2 Density Pressure Fail Code	0 Inferred	Read/Write
2947	Spring Forward Month	0 Inferred	Read/Write
2948	Spring Forward Day	0 Inferred	Read/Write
2949	Fall Back Month	0 Inferred	Read/Write
2950	Fall Back Day	0 Inferred	Read/Write
2951	Enable Daylight Time Saving	0 Inferred	Read/Write
2952-2956	Spare		
2957	Meter #1 Select Mass Pulse Input (1=Yes)	0 Inferred	Read/Write
2958	Meter #2 Select Mass Pulse Input (1=Yes)	0 Inferred	Read/Write
2959	Meter #1 Retroactive Meter Factor	0 Inferred	Read/Write
2960	Meter #2 Retroactive Meter Factor	0 Inferred	Read/Write
2961-2964	Multi.Var#1 DP Tag	8 Chars.	Read/Write
2965-2968	Multi.Var#1 Pressure Tag	8 Chars.	Read/Write
2969-2972	Multi.Var#1 Temperature Tag	8 Chars.	Read/Write
2973-2976	Multi.Var#2 DP Tag	8 Chars.	Read/Write
2977-2980	Multi.Var#2 Pressure Tag	8 Chars.	Read/Write
2981-2984	Multi.Var#2 Temperature Tag	8 Chars.	Read/Write
2985	Analog Output #1 Remote Control (0-100)	0 Inferred	Read/Write
2986	Analog Output #2 Remote Control (0-100)	0 Inferred	Read/Write
2987	Analog Output #3 Remote Control (0-100)	0 Inferred	Read/Write
2988	Analog Output #4 Remote Control (0-100)	0 Inferred	Read/Write
2989-2991	Spare		
2991	Reset PID	0 Inferred	Read/Write

Modbus Address Table– 16 Bits Integer

ADDRESS	DESCRIPTION	DECIMAL	READ/WRITE
3001	Version Number	2 Inferred	Read
3002	End Meter #1 Batch	0 Inferred	Read/Write
3003	End Meter #2 Batch	0 Inferred	Read/Write
3004-3005	Spare		
3006	Meter #1 Product Used	0 Inferred	Read
3007	Meter #1 Table Used	0 Inferred	Read
3008-3011	Meter #1 ID	8 Chars	Read
3012	Meter #2 Product Used	0 Inferred	Read
3013	Meter #2 Table Used	0 Inferred	Read
3014-3017	Meter #2 ID	8 Chars	Read
3018	Reserved		
3019	Disable Alarms	0 Inferred	Read
3020	Meter#1 Next Batch Product ID or No.	0 Inferred	Read
3021	Meter#2 Next Batch Product ID or No.	0 Inferred	Read
3022	Reserved		
3023	Reserved		
3024	Enable Calibration Mode	0 Inferred	Read/Write
3025	Calibration – Set Time (1-9 Hours)	0 Inferred	Read/Write
3026	Last Daily Report Request (1=Latest,35=Oldest) Daily Data Area in Location 3431-3711	0 Inferred	Write
3027	Last Batch Report Request(1=Latest,32=Oldest) Last Batch Data Area in Location 3431-3711	0 Inferred	Write
3028	Reserved		
3029	Last Hourly Report Request (1=Latest,32=Oldest)	0 Inferred	Write
3030	Last Alarm Report Request (1=Latest,100=Oldest)	0 Inferred	Write
3031	Last Audit Report Request (1=Latest,100=Oldest)	0 Inferred	Write

Modbus Address Table– 16 Bits Integer

ADDRESS	DESCRIPTION	DECIMAL	READ/WRITE

**Observed Density is the density at the densitometer

Scaled Data Area

3032	Meter #1 Gross Flow Rate	0 Inferred	Read
3033	Meter #1 Net Flow Rate	0 Inferred	Read
3034	Meter #1 Mass Flow Rate	0 Inferred	Read
3035	Spare		
3036	Meter #1 Forward Batch Gross	0 Inferred	Read
3037	Meter #1 Forward Batch Net	0 Inferred	Read
3038	Meter #1 Forward Batch Mass	0 Inferred	Read
3039	Spare		
3040	Meter #1 Reverse Batch Gross	0 Inferred	Read
3041	Meter #1 Reverse Batch Net	0 Inferred	Read
3042	Meter #1 Reverse Batch Mass	0 Inferred	Read
3043	Spare		
3044	Meter #2 Gross Flow Rate	0 Inferred	Read
3045	Meter #2 Net Flow Rate	0 Inferred	Read
3046	Meter #2 Mass Flow Rate	0 Inferred	Read
3047	Spare		
3048	Meter #2 Forward Batch Gross	0 Inferred	Read
3049	Meter #2 Forward Batch Net	0 Inferred	Read
3050	Meter #2 Forward Batch Mass	0 Inferred	Read
3051	Spare		
3052	Meter #2 Reverse Batch Gross	0 Inferred	Read
3053	Meter #2 Reverse Batch Net	0 Inferred	Read
3054	Meter #2 Reverse Batch Mass	0 Inferred	Read
3055	Spare		
3056	Spare #1 Data	0 Inferred	Read
3057	Spare #2 Data	0 Inferred	Read
3058	Meter #1 DP	0 Inferred	Read
3059	Meter#1 Temperature	0 Inferred	Read
3060	Meter#1 Pressure	0 Inferred	Read
3061	Meter#1 **Observed Density	0 Inferred	Read
3062	Meter#1 Density Temperature	0 Inferred	Read
3063	Meter#2 DP	0 Inferred	Read
3064	Meter#2 Temperature	0 Inferred	Read
3065	Meter#2 Pressure	0 Inferred	Read
3066	Meter#2 **Observed Density	0 Inferred	Read
3067	Meter#2 Density Temperature	0 Inferred	Read

Scaled Data Area Ends

Modbus 16 bit Address Table Ends

Modbus Address Table – 2x16 Bits Integer

ADDRESS	DESCRIPTION	DECIMAL	READ/WRITE
**Observed Density is the density at the densitometer			
3131	Meter #1 Gross Flow Rate	2 Inferred	Read
3133	Meter #1 NET Flow Rate	2 Inferred	Read
3135	Meter #1 MASS Flow Rate	2 Inferred	Read
3137	Spare		
3139	Meter #1 DP Low	4 Inferred	Read
3141	Meter #1 DP High	4 Inferred	Read
3143	Meter #1 DP	4 Inferred	Read
3145	Meter #1 Temperature	1 Inferred	Read
3147	Meter #1 Pressure	1 Inferred	Read
3149	Meter #1 **Observed Density	3 Inferred	Read
3151	Meter #1 Density Temperature	1 Inferred	Read
3153	Meter #1 Density@60	3 Inferred	Read
3155	Meter #1 Y Factor	6 Inferred	Read
3157	Meter #1 Fa Factor	6 Inferred	Read
3159	Meter #1 K/CD/MF Factor	6 Inferred	Read
3161	Meter#1 Density Pressure	1 Inferred	Read
3163	Meter #1 CTL	5 Inferred	Read
3165	Meter #1 CPL	5 Inferred	Read
3167	Meter #1 EQUIL	3 Inferred	Read
3169	Meter #1 API	1 Inferred	Read
3171	Meter #1 SG	4 Inferred	Read
3173	Meter #1 Forward Batch GROSS Total	1 Inferred	Read
3175	Meter #1 Forward Batch NET Total	1 Inferred	Read
3177	Meter #1 Forward Batch MASS Total	2 Inferred	Read
3179	Spare		
3181	Meter #1 Forward Cum. GROSS Total	1 Inferred	Read
3183	Meter #1 Forward Cum. NET Total	1 Inferred	Read
3185	Meter #1 Forward Cum. MASS Total	2 Inferred	Read
3187	Spare		
3189	Meter #1 Reverse Batch GROSS Total	1 Inferred	Read
3191	Meter #1 Reverse Batch NET Total	1 Inferred	Read
3193	Meter #1 Reverse Batch MASS Total	2 Inferred	Read
3195	Spare		
3197	Meter #1 Reverse Cum GROSS Total	1 Inferred	Read
3199	Meter #1 Reverse Cum NET Total	1 Inferred	Read
3201	Meter #1 Reverse Cum MASS Total	2 Inferred	Read
3203	Spare		
3205	Spare		
3207	Meter #1 Batch Start Date	0 Inferred	Read
3209	Meter #1 Batch Start Time	0 Inferred	Read
3211	Meter #1 Density LB/FT3	3 inferred	Read
3213	Meter #1 Yesterday Forward Cum.Gross Total	1 inferred	Read
3215	Meter #1 Yesterday Forward Cum.Net Total	1 Inferred	Read
3217	Meter #1 Yesterday Forward Cum Mass Total	2 Inferred	Read
3219	Meter #1 Last Batch Forward Cum.Gross Total	1 Inferred	Read
3221	Meter #1 Last Batch Forward Cum Net Total	1 Inferred	Read
3223	Meter #1 Last Batch Forward Cum Mass Total	2 Inferred	Read
3225	Meter #2 Gross Flow Rate	2 Inferred	Read
3227	Meter #2 NET Flow Rate	2 Inferred	Read
3229	Meter #2 MASS Flow Rate	2 Inferred	Read

3231	Spare

Modbus Address Table – 2x16 Bits Integer

ADDRESS	DESCRIPTION	DECIMAL	READ/WRITE
3233	Meter #2 DP Low	4 Inferred	Read
3235	Meter #2 DP High	4 Inferred	Read
3237	Meter #2 DP	4 Inferred	Read
3239	Meter #2 Temperature	1 Inferred	Read
3241	Meter #2 Pressure	1 Inferred	Read
3243	Meter #2 **Observed Density LB/FT3	3 Inferred	Read
3245	Meter #2 Density Temperature	1 Inferred	Read
3247	Meter #2 Density@60	3 Inferred	Read
3249	Meter #2 Y Factor	6 Inferred	Read
3251	Meter #2 Fa Factor	6 Inferred	Read
3253	Meter #2 K/CD/MF Factor	6 Inferred	Read
3255	Meter #2 Density Pressure	1 Inferred	Read
3257	Meter #2 CTL	5 Inferred	Read
3259	Meter #2 CPL	5 Inferred	Read
3261	Meter #2 EQUIL	3 Inferred	Read
3263	Meter #2 API	1 Inferred	Read
3265	Meter #2 SG	4 Inferred	Read
3267	Meter #2 Forward Batch GROSS Total	1 Inferred	Read
3269	Meter #2 Forward Batch NET Total	1 Inferred	Read
3271	Meter #2 Forward Batch MASS Total	2 Inferred	Read
3273	Spare		
3275	Meter #2 Forward Cum. GROSS Total	1 Inferred	Read
3277	Meter #2 Forward Cum. NET Total	1 Inferred	Read
3279	Meter #2 Forward Cum. MASS Total	2 Inferred	Read
3281	Spare		
3283	Meter #2 Reverse Batch GROSS Total	1 Inferred	Read
3285	Meter #2 Reverse Batch NET Total	1 Inferred	Read
3287	Meter #2 Reverse Batch MASS Total	2 Inferred	Read
3289	Spare		
3291	Meter #2 Reverse Cum. GROSS Total	1 Inferred	Read
3293	Meter #2 Reverse Cum. NET Total	1 Inferred	Read
3295	Meter #2 Reverse Cum. MASS Total	2 Inferred	Read
3297	Spare		
3299	Spare		
3301	Meter #2 Batch Start Date	0 Inferred	Read
3303	Meter #2 Batch Start Time	0 Inferred	Read
3305	Meter #2 Calc.Density LB/FT3	3 Inferred	Read
3307	Meter #2 Yesterday Forward Cum.Gross Total	1 inferred	Read
3309	Meter #2 Yesterday Forward Cum.Net Total	1 Inferred	Read
3311	Meter #2 Yesterday Forward Cum Mass Total	2 Inferred	Read
3313	Meter #2 Last Batch Forward Cum.Gross Total	1 Inferred	Read
3315	Meter #2 Last Batch Forward Cum Net Total	1 Inferred	Read
3317	Meter #2 Last Batch Forward Cum Mass Total	2 Inferred	Read
3319	Station GROSS. Flow Rate	2 Inferred	Read
3321	Station NET Flow Rate	2 Inferred	Read
3323	Station MASS Flow Rate	2 Inferred	Read
3325	Spare		

Modbus Address Table – 2x16 Bits Integer

ADDRESS	DESCRIPTION	DECIMAL	READ/WRITE
3327	Station Forward Batch GROSS Total	1 Inferred	Read
3329	Station Forward Batch NET Total	1 Inferred	Read
3331	Station Forward Batch MASS Total	2 Inferred	Read
3333	Spare		
3335	Station Forward Cum. GROSS Total	1 Inferred	Read
3337	Station Forward Cum. NET Total	1 Inferred	Read
3339	Station Forward Cum. MASS Total	2 Inferred	Read
3341	Spare		
3343	Station Reverse Batch GROSS Total	1 Inferred	Read
3345	Station Reverse Batch NET Total	1 Inferred	Read
3347	Station Reverse Batch MASS Total	2 Inferred	Read
3349	Spare		
3351	Station Reverse Cum. GROSS Total	1 Inferred	Read
3353	Station Reverse Cum. NET Total	1 Inferred	Read
3355	Station Reverse Cum. MASS Total	2 Inferred	Read
3357	Spare		
3359	Meter #1 Hourly Forward Gross Total	1 Inferred	Read
3361	Meter #1 Hourly Forward Mass Total	2 Inferred	Read
3363	Meter #1 Hourly Forward Net Total	1 Inferred	Read
3365	Meter #2 Hourly Forward Gross Total	1 Inferred	Read
3367	Meter #2 Hourly Forward Mass Total	2 Inferred	Read
3369	Meter #2 Hourly Forward Net Total	1 Inferred	Read
3371	Battery Voltage	2 Inferred	Read
3373	Spare #1	4 Inferred	Read
3375	Spare #2	4 Inferred	Read
3377	Analog Output #1 Output %	2 Inferred	Read
3379	Analog Output #2 Output %	2 Inferred	Read
3381	Meter #1 Uncorrected Density	3 Inferred	Read
3383	Meter #2 Uncorrected Density	3 Inferred	Read
3385	Meter#1 Previous Batch Opening Date	0 Inferred	Read
3387	Meter#1 Previous Batch Opening Time	0 Inferred	Read
3389	Meter#1 Previous Batch Closing Date	0 Inferred	Read
3391	Meter#1 Previous Batch Closing Time	0 Inferred	Read
3393	Meter#1 Previous Batch Product Number	0 Inferred	Read
3395	Meter#1 Previous Batch Number	0 Inferred	Read
3397	Meter#1 Previous Batch Table	0 Inferred	Read
3399	Spare		
3401	Meter#1 Previous Batch Opening Forward Gross	1 Inferred	Read
3403	Meter#1 Previous Batch Opening Forward Net	1 Inferred	Read
3405	Meter#1 Previous Batch Opening Forward Mass	2 Inferred	Read
3407-3409	Spare		
3411	Analog Output #3 %	2 Inferred	Read
3413	Analog Output #4 %	2 Inferred	Read
3415	Meter#1 Previous Batch Forward Average DP	4 Inferred	Read
3417	Meter#1 Previous Batch Forward Average CTL	5 Inferred	Read
3419	Meter#1 Previous Batch Forward Average CPL	5 Inferred	Read
3421	Meter#1 Previous Batch Forward Average SG60	6 Inferred	Read
3423	Meter#1 Previous Batch Reverse Average DP	4 Inferred	Read
3425	Meter#1 Previous Batch Reverse Average CTL	5 Inferred	Read
3427	Meter#1 Previous Batch Reverse Average CPL	5 Inferred	Read
3429	Meter#1 Previous Batch Reverse Average SG60	6 Inferred	Read

Modbus Address Table – 2x16 Bits Integer

ADDRESS DESCRIPTION DECIMAL READ/WRITE

**Observed Density is the density at the densitometer

Last Batch/Daily Data Area

Last Daily Report

3026 = Last Daily Report Request (16 bits Integer, Write only)

Set last daily report request to 1=Latest, 35=Oldest.

Last Batch Report

3027 = Last Batch Request (16 bits Integer, Write only)

Set last batch request to 1=Latest, 35=Oldest

3431	Batch Type/Disp/Bank/Station Flag	0 Inferred	Read
3433	Meter #1 Table Used	0 Inferred	Read
3435	Meter #2 Table Used	0 Inferred	Read
3437	Meter #1 Product No	0 Inferred	Read
3439	Meter #2 Product No	0 Inferred	Read
3441	Meter #1 Opening Forward GROSS Total	1 Inferred	Read
3443	Meter #1 Opening Forward NET Total	1 Inferred	Read
3445	Meter #1 Opening Forward MASS Total	2 Inferred	Read
3447	Meter #1 Forward Average Meter Density	3 Inferred	Read
3449	Meter #1 Forward Batch/Daily GROSS Total	1 Inferred	Read
3451	Meter #1 Forward Batch//Daily NET Total	1 Inferred	Read
3453	Meter #1 Forward Batch/Daily MASS Total	2 Inferred	Read
3455	Meter #1 Forward Average CTPL	5 Inferred	Read
3457	Meter #1 Forward Average DP	4 Inferred	Read
3459	Meter #1 Forward Average Temperature	1 Inferred	Read
3461	Meter #1 Forward Average Pressure	1 Inferred	Read
3463	Meter #1 Forward Avg **Observed Dens LB/FT3	3 Inferred	Read
3465	Meter #1 Forward Average Density Temp	1 Inferred	Read
3467	Meter #1 Forward Average LB/FT3.b	3 Inferred	Read
3469	Meter #1 Forward Average Y Factor	6 Inferred	Read
3471	Meter #1 Forward Average Fa Factor	6 Inferred	Read
3473	Meter #1 Forward Average K/CD/LMF Factor	6 Inferred	Read
3475	Meter#1 Forward Average Observed GM/CC	6 Inferred	Read
3477	Meter #1 Forward Average CTL	5 Inferred	Read
3479	Meter #1 Forward Average CPL	5 Inferred	Read
3481	Meter #1 Opening Reverse GROSS Total	1 Inferred	Read
3483	Meter #1 Opening Reverse NET Total	1 Inferred	Read
3485	Meter #1 Opening Reverse MASS Total	2 Inferred	Read
3487	Meter #1 Reverse Average Density	3 Inferred	Read
3489	Meter #1 Reverse Batch/Daily GROSS Total	1 Inferred	Read
3491	Meter #1 Reverse Batch/Daily NET Total	1 Inferred	Read
3493	Meter #1 Reverse Batch/Daily MASS Total	2 Inferred	Read
3495	Meter #1 Reverse Average CTPL	5 Inferred	Read
3497	Meter #1 Reverse Average DP	4 Inferred	Read
3499	Meter #1 Reverse Average Temperature	1 Inferred	Read
3501	Meter #1 Reverse Average Pressure	1 Inferred	Read
3503	Meter #1 Reverse Avg **Observed Dens LB/FT3	3 Inferred	Read
3505	Meter #1 Reverse Average Density Temp	1 Inferred	Read
3507	Meter #1 Reverse Average LB/FT3.b	3 Inferred	Read
3509	Meter #1 Reverse Average Y Factor	6 Inferred	Read
3511	Meter #1 Reverse Average Fa Factor	6 Inferred	Read
3513	Meter #1 Reverse Average K/CD/MF Factor	6 Inferred	Read
3515	Meter #1 Reverse Average Observed GM/CC	6 Inferred	Read
3517	Meter #1 Reverse Average CTL	5 Inferred	Read

Modbus Address Table – 2x16 Bits Integer

ADDRESS	DESCRIPTION	DECIMAL	READ/WRITE
3519	Meter #1 Reverse Average CPL	5 Inferred	Read
3521	Meter #1 Batch Number	0 Inferred	Read
3523	Meter #1 Batch Start Date	0 Inferred	Read
3525	Meter #1 Batch Start Time	0 Inferred	Read
3527	Meter #1 Batch End Date for the Batch Report or Day Start Date for the Daily Report	0 Inferred	Read
3529	Meter #1 Batch End Time for the Batch Report or Day Start Time for the Daily Report	0 Inferred	Read
3531-3537	Meter #1 Product Name	16 Char	Read
3539-3541	Meter #1 ID	8 Char	Read
3543	Meter #1 Pipe ID	5 Inferred	Read
3545	Meter #1 Orifice ID	5 Inferred	Read
3547	Meter #1 Dens.Corr.Factor	5 Inferred	Read
3549	Meter #1 Unit	0 Inferred	Read
3551	Meter #1 Calculation Type	0 Inferred	Read
3553	Meter #1 K Factor	3 Inferred	Read
3555	Meter #2 Opening Forward GROSS Total	1 Inferred	Read
3557	Meter #2 Opening Forward NET Total	1 Inferred	Read
3559	Meter #2 Opening Forward MASS Total	2 Inferred	Read
3561	Meter #2 Forward Average Density	3 Inferred	Read
3563	Meter #2 Forward Batch/Daily GROSS Total	1 Inferred	Read
3565	Meter #2 Forward Batch/Daily NET Total	1 Inferred	Read
3567	Meter #2 Forward Batch/Daily MASS Total	2 Inferred	Read
3569	Meter #2 Forward Average CTPL	5 Inferred	Read
3571	Meter #2 Forward Average DP	4 Inferred	Read
3573	Meter #2 Forward Average Temperature	1 Inferred	Read
3575	Meter #2 Forward Average Pressure	1 Inferred	Read
3577	Meter #2 Forward Avg **Observed Dens LB/FT3	3 Inferred	Read
3579	Meter #2 Forward Average Density Temp	1 Inferred	Read
3581	Meter #2 Forward Average LB/FT3.b	3 Inferred	Read
3583	Meter #2 Forward Average Y Factor	6 Inferred	Read
3585	Meter #2 Forward Average Fa Factor	6 Inferred	Read
3587	Meter #2 Forward Average K/CD/MF Factor	6 Inferred	Read
3589	Meter #2 Forward Average Observed GM/CC	6 Inferred	Read
3591	Meter #2 Forward Average CTL	5 Inferred	Read
3593	Meter #2 Forward Average CPL	5 Inferred	Read
3595	Meter #2 Opening Reverse GROSS Total	1 Inferred	Read
3597	Meter #2 Opening Reverse NET Total	1 Inferred	Read
3599	Meter #2 Opening Reverse MASS Total	2 Inferred	Read
3601	Meter #2 Reverse Average Density	3 Inferred	Read
3603	Meter #2 Reverse Batch/Daily GROSS Total	1 Inferred	Read
3605	Meter #2 Reverse Batch/Daily NET Total	1 Inferred	Read
3607	Meter #2 Reverse Batch/Daily MASS Toal	2 Inferred	Read
3609	Meter #2 Reverse Average CTPL	5 Inferred	Read
3611	Meter #2 Reverse Average DP	4 Inferred	Read
3613	Meter #2 Reverse Average Temperature	1 Inferred	Read
3615	Meter #2 Reverse Average Pressure	1 Inferred	Read
3617	Meter #2 Reverse Average **Observed Density	3 Inferred	Read
3619	Meter #2 Reverse Average Density Temp	1 Inferred	Read

Modbus Address Table – 2x16 Bits Integer

ADDRESS	DESCRIPTION	DECIMAL	READ/WRITE
3621	Meter #2 Reverse Average Density@60	3 Inferred	Read
3623	Meter #2 Reverse Average Y Factor	6 Inferred	Read
3625	Meter #2 Reverse Average Fa Factor	6 Inferred	Read
3627	Meter #2 Reverse Average K/CD/MF Factor	6 Inferred	Read
3629	Meter #2 Reverse Average Observed GM/CC	6 Inferred	Read
3631	Meter #2 Reverse Average CTL	5 Inferred	Read
3633	Meter #2 Reverse Average CPL	5 Inferred	Read
3635	Meter #2 Batch Number	0 Inferred	Read
3637	Meter #2 Batch Start Date	0 Inferred	Read
3639	Meter #2 Batch Start Time	0 Inferred	Read
3641	Meter #2 Batch End Date for the Batch Report or Day Start Date for the Daily Report	0 Inferred	Read
3643	Meter #2 Batch End Time for the Batch Report or Day Start Time for the Daily Report	0 Inferred	Read
3645	Meter #2 Product Name	16 Char	Read
3653	Meter #2 ID	8 Char	Read
3657	Meter #2 Pipe ID	5 Inferred	Read
3659	Meter #2 Orifice ID	5 Inferred	Read
3661	Meter #2 Dens.Corr.Factor	5 Inferred	Read
3663	Meter #2 Unit	0 Inferred	Read
3665	Meter #2 Calculation Type	0 Inferred	Read
3667	Meter #2 K Factor	3 Inferred	Read
3669	Meter#2 Forward Average Observed SG	4 Inferred	Read
3671	Meter#2 Forward Average SG60	4 Inferred	Read
3673	Meter#2 Reverse Average Observed SG	4 Inferred	Read
3675	Meter#2 Reverse Average SG60	4 Inferred	Read
3677	Station Opening Forward GROSS Total	1 Inferred	Read
3679	Station Opening Forward NET Total	1 Inferred	Read
3681	Station Opening Forward MASS Total	2 Inferred	Read
3683	Spare		
3685	Station Forward Batch/Daily GROSS	1 Inferred	Read
3687	Station Forward Batch/Daily NET	1 Inferred	Read
3689	Station Forward Batch/Daily MASS	2 Inferred	Read
3691	Spare		
3693	Station Opening Reverse GROSS Total	1 Inferred	Read
3695	Station Opening Reverse NET Total	1 Inferred	Read
3697	Station Opening Reverse MASS Total	2 Inferred	Read
3699	Spare		
3701	Station Reverse Batch/Daily GROSS	1 Inferred	Read
3703	Station Reverse Batch/Daily NET	1 Inferred	Read
3705	Station Reverse Batch/Daily MASS	2 Inferred	Read
3707	Spare		
3709	Spare #1	4 Inferred	Read
3711	Spare #2	4 Inferred	Read
3713	Meter#1 Forward Average Observed SG	4 Inferred	Read
3715	Meter#1 Forward Average SG60	4 Inferred	Read
3717	Meter#1 Reverse Average Observed SG	4 Inferred	Read
3719	Meter#1 Reverse Average SG60	4 Inferred	Read

Last Batch/Daily Data Area Ends

Modbus Address Table – 2x16 Bits Integer

ADDRESS	DESCRIPTION	DECIMAL	READ/WRITE
3721	Meter#1 Yesterday's Forward Daily Gross Total	1 Inferred	Read
3723	Meter#1 Yesterday's Forward Daily Net Total	1 Inferred	Read
3725	Meter#1 Yesterday's Forward Daily Mass Total	2 Inferred	Read
3727	Meter#2 Yesterday's Forward Daily Gross Total	1 Inferred	Read
3729	Meter#2 Yesterday's Forward Daily Net Total	1 Inferred	Read
3731	Meter#2 Yesterday's Forward Daily Mass Total	2 Inferred	Read
3733	Station Yesterday's Forward Daily Gross Total	1 Inferred	Read
3735	Station Yesterday's Forward Daily Net Total	1 Inferred	Read
3737	Station Yesterday's Forward Daily Mass Total	2 Inferred	Read
3739	Spare		
3741	Meter #1 Calibration Mass Flow Rate	2 Inferred	Read
3743	Meter #2 Calibration Mass Flow Rate	2 Inferred	Read
3745	Previous Batch Meter#1 FWA Temperature	1 Inferred	Read
3747	Previous Batch Meter#1 FWA Pressure	1 Inferred	Read
3749	Previous Batch Meter#1 FWA Observed GM/CC	6 Inferred	Read
3751	Previous Batch Meter#1 FWA GM/CC@60	6 Inferred	Read
3753	Previous Batch Meter#1 FWA K/CD/LMF	6 Inferred	Read
3755	Previous Batch Meter#2 FWA Temperature	1 Inferred	Read
3757	Previous Batch Meter#2 FWA Pressure	1 Inferred	Read
3759	Previous Batch Meter#2 FWA Observed GM/CC	6 Inferred	Read
3761	Previous Batch Meter#2 FWA GM/CC@60	6 Inferred	Read
3763	Previous Batch Meter#2 FWA K/CD/LMF	6 Inferred	Read
3765	Previous Batch Meter#1 Reverse FWA Temperature	1 Inferred	Read
3767	Previous Batch Meter#1 Reverse FWA Pressure	1 Inferred	Read
3769	Previous Batch Meter#1 R.FWA Observed GM/CC	6 Inferred	Read
3771	Previous Batch Meter#1 Reverse FWA GM/CC@60	6 Inferred	Read
3773	Previous Batch Meter#1 Reverse FWA K/CD/LMF	6 Inferred	Read
3775	Previous Batch Meter#2 Reverse FWA Temperature	1 Inferred	Read
3777	Previous Batch Meter#2 Reverse FWA Pressure	1 Inferred	Read
3779	Previous Batch Meter#2 R.FWA Observed GM/CC	6 Inferred	Read
3781	Previous Batch Meter#2 Reverse FWA GM/CC@60	6 Inferred	Read
3783	Previous Batch Meter#2 Reverse FWA K/CD/LMF	6 Inferred	Read
3785	Previous Batch Meter#1 Opening R.Gross Total	1 Inferred	Read
3787	Previous Batch Meter#1 Opening R.Net Total	1 Inferred	Read
3789	Previous Batch Meter#1 Opening R.Mass Total	2 Inferred	Read
3791	Meter #1 Temperature Override	1 Inferred	Read/Write
3793	Meter #2 Temperature Override	1 Inferred	Read/Write
3795	Meter #1 Pressure Override	1 Inferred	Read/Write
3797	Meter #1 Pressure Override	1 Inferred	Read/Write
3799	Meter #1 Override Current Batch Gravity	1 or 4 Inferred	Read/Write
3801	Meter #1 Alpha T E-6 Override	3 Inferred	Read/Write
3803	Meter #2 Override Current Batch Gravity	1 or 4 Inferred	Read/Write
3805	Meter #2 Alpha T E-6 Override	3 Inferred	Read/Write
3807	Equilibrium Pressure Override #1	3 Inferred	Read/Write
3809	Equilibrium Pressure Override #2	3 Inferred	Read/Write
3811	Request Start Date	0 Inferred	Read/Write
3813-3815	Reserved		
3817	Spare		
3819-4149	Reserved		
4151	Meter #1 Densitometer Period	3 Inferred	Read
4153	Meter #2 Densitometer Period	3 Inferred	Read

Modbus Address Table – 2x16 Bits Integer

ADDRESS	DESCRIPTION	DECIMAL	READ/WRITE
4155-4189	Spare		
4191	Meter#1 Yesterday's Reverse Gross Total	1 Inferred	Read
4193	Meter#1 Yesterday's Reverse Net Total	1 Inferred	Read
4195	Meter#1 Yesterday's Reverse Mass Total	2 Inferred	Read
4201	Date (MMDDYY)	0 Inferred	Read/Write
4203	Time (HHMMSS)	0 Inferred	Read/Write
4205	Meter #1 Preset Volume	1 Inferred	Read/Write
4207	Meter #1 Preset Warning	1 Inferred	Read/Write
4209	Meter #2 Preset Volume	1 Inferred	Read/Write
4211	Meter #2 Preset Warning Volume	1 Inferred	Read/Write
4213	Meter #1 DP Cut Off	4 Inferred	Read/Write
4215	Meter #1 Flow Low Limit	2 Inferred	Read/Write
4217	Meter #1 Flow High Limit	2 Inferred	Read/Write
4219	Meter #1 Ticket Number	0 Inferred	Read/Write
4221	Meter #1 Next Batch Preset Volume	1 Inferred	Read/Write
4223	Meter #1 Next Batch Preset Warning	1 Inferred	Read/Write
4225	Meter #2 DP Cut Off	4 Inferred	Read/Write
4227	Meter #2 Flow Low Limit	2 Inferred	Read/Write
4229	Meter #2 Flow High Limit	2 Inferred	Read/Write
4231	Meter #2 Ticket Number	0 Inferred	Read/Write
4233	Meter #2 Next Batch Preset Volume	1 Inferred	Read/Write
4235	Meter #2 Next Batch Preset Warning	1 Inferred	Read/Write
4237	Batch End Start Date	0 Inferred	Read/Write
4239	Spare		
4241	Product #1 API Gravity	1 Inferred	Read/Write
4243	Product #1 Specific Gravity	4 Inferred	Read/Write
4245	Product #1 Density	4 Inferred	Read/Write
4247	Product #1 Alpha T E-6	3 Inferred	Read/Write
4249	Product #2 API Gravity	1 Inferred	Read/Write
4251	Product #2 Specific Gravity	4 Inferred	Read/Write
4253	Product #2 Density	4 Inferred	Read/Write
4255	Product #2 Alpha T E-6	3 Inferred	Read/Write
4257	Product #3 API Gravity	1 Inferred	Read/Write
4259	Product #3 Specific Gravity	4 Inferred	Read/Write
4261	Product #3 Density	4 Inferred	Read/Write
4263	Product #3 Alpha T E-6	3 Inferred	Read/Write
4265	Product #4 API Gravity	1 Inferred	Read/Write
4267	Product #4 Specific Gravity	4 Inferred	Read/Write
4269	Product #4 Density	4 Inferred	Read/Write
4271	Product #4 Alpha T E-6	3 Inferred	Read/Write
4273	Product #5 API Gravity	1 Inferred	Read/Write
4275	Product #5 Specific Gravity	4 Inferred	Read/Write
4277	Product #5 Density	4 Inferred	Read/Write
4279	Product #5 Alpha T E-6	3 Inferred	Read/Write
4281	Product #6 API Gravity	1 Inferred	Read/Write
4283	Product #6 Specific Gravity	4 Inferred	Read/Write
4285	Product #6 Density	4 Inferred	Read/Write
4287	Product #6 Alpha T E-6	3 Inferred	Read/Write
4289	Product #7 API Gravity	1 Inferred	Read/Write
4291	Product #7 Specific Gravity	4 Inferred	Read/Write
4293	Product #7 Density	4 Inferred	Read/Write
4295	Product #7 Alpha T E-6	3 Inferred	Read/Write

Modbus Address Table – 2x16 Bits Integer

ADDRESS	DESCRIPTION	DECIMAL	READ/WRITE
4297	Product #8 API Gravity	1 Inferred	Read/Write
4299	Product #8 Specific Gravity	4 Inferred	Read/Write
4301	Product #8 Density	4 Inferred	Read/Write
4303	Product #8 Alpha T E-6	3 Inferred	Read/Write
4305	Product #9 API Gravity	1 Inferred	Read/Write
4307	Product #9 Specific Gravity	4 Inferred	Read/Write
4309	Product #9 Density	4 Inferred	Read/Write
4311	Product #9 Alpha T E-6	3 Inferred	Read/Write
4313	Product #10 API Gravity	1 Inferred	Read/Write
4315	Product #10 Specific Gravity	4 Inferred	Read/Write
4317	Product #10 Density	4 Inferred	Read/Write
4319	Product #10 Alpha T E-6	3 Inferred	Read/Write
4321	Product #11 API Gravity	1 Inferred	Read/Write
4323	Product #11 Specific Gravity	4 Inferred	Read/Write
4325	Product #11 Density	4 Inferred	Read/Write
4327	Product #11 Alpha T E-6	3 Inferred	Read/Write
4329	Product #12 API Gravity	1 Inferred	Read/Write
4331	Product #12 Specific Gravity	4 Inferred	Read/Write
4333	Product #12 Density	4 Inferred	Read/Write
4335	Product #12 Alpha T E-6	3 Inferred	Read/Write
4337	Product #13 API Gravity	1 Inferred	Read/Write
4339	Product #13 Specific Gravity	4 Inferred	Read/Write
4341	Product #13 Density	4 Inferred	Read/Write
4343	Product #13 Alpha T E-6	3 Inferred	Read/Write
4345	Product #14 API Gravity	1 Inferred	Read/Write
4347	Product #14 Specific Gravity	4 Inferred	Read/Write
4349	Product #14 Density	4 Inferred	Read/Write
4351	Product #14 Alpha T E-6	1 Inferred	Read/Write
4353	Product #15 API Gravity	1 Inferred	Read/Write
4355	Product #15 Specific Gravity	4 Inferred	Read/Write
4357	Product #15 Density	4 Inferred	Read/Write
4359	Product #15 Alpha T E-6	3 Inferred	Read/Write
4361	Product #16 API Gravity	1 Inferred	Read/Write
4363	Product #16 Specific Gravity	4 Inferred	Read/Write
4365	Product #16 Density	4 Inferred	Read/Write
4367	Product #16 Alpha T E-6	3 Inferred	Read/Write
4369	Meter #1 Pipe ID Inches/Meter ID	5 Inferred	Read/Write
4371	Meter #1 Orifice ID Inches/Cone ID	5 Inferred	Read/Write
4373	Meter #1 Specific Heats (Isentropic Exponent)	4 Inferred	Read/Write
4375	Meter #1 Viscosity in Centipoise/V-Cone Coeff.	4 Inferred	Read/Write
4377	Meter #1 Pipe Coeff. Thermal Expansion E-6	2 Inferred	Read/Write
4379	Meter #1 Orifice Coeff. Thermal Expansion E-6	2 Inferred	Read/Write
4381	Meter #1 Reference Temperature of Pipe	2 Inferred	Read/Write
4383	Meter #1 Reference Temperature of Orifice	2 Inferred	Read/Write
4385	Meter #2 Pipe ID Inches/Meter ID	5 Inferred	Read/Write
4387	Meter #2 Orifice ID Inches/Cone ID	5 Inferred	Read/Write
4389	Meter #2 Specific Heats (Isentropic Exponent)	4 Inferred	Read/Write
4391	Meter #2 Viscosity in Centipoise/V-Cone Coeff.	4 Inferred	Read/Write
4393	Meter #2 Pipe Coeff. Thermal Expansion E-6	2 Inferred	Read/Write
4395	Meter #2 Orifice Coeff. Thermal Expansion E-6	2 Inferred	Read/Write
4397	Meter #2 Reference Temperature of Pipe	2 Inferred	Read/Write
4399	Meter #2 Reference Temperature of Orifice	2 Inferred	Read/Write
4401	Meter #1 DP Switch High Percentage	2 Inferred	Read/Write

Modbus Address Table – 2x16 Bits Integer

ADDRESS	DESCRIPTION	DECIMAL	READ/WRITE
4403	Meter #2 DP Switch High Percentage	2 Inferred	Read/Write
4405	Meter #1 Fa Override	6 Inferred	Read/Write
4407	Meter #2 Fa Override	6 Inferred	Read/Write
4409	Meter #1 Kd2 Override	6 Inferred	Read/Write
4411	Meter #2 Kd2 Override	6 Inferred	Read/Write
4413	Meter #1 Venturi C Override	6 Inferred	Read/Write
4415	Meter #2 Venturi C Override	6 Inferred	Read/Write
4417	Meter #1 K Factor	3 Inferred	Read/Write
4419	Meter #1 Forward Meter Factor	6 Inferred	Read/Write
4421	Meter #1 Reverse Meter Factor	6 Inferred	Read/Write
4423	Meter #2 K Factor	3 Inferred	Read/Write
4425	Meter #2 Forward Meter Factor	6 Inferred	Read/Write
4427	Meter #2 Reverse Meter Factor	6 Inferred	Read/Write
4429	Nist14 – Mol % of Methane	4 Inferred	Read/Write
4431	Nist14 – Mol % of Ethane	4 Inferred	Read/Write
4433	Nist14 – Mol % of Propane	4 Inferred	Read/Write
4435	Nist14 – Mol % of i-Butane	4 Inferred	Read/Write
4437	Nist14 – Mol % of n-Butane	4 Inferred	Read/Write
4439	Nist14 – Mol % of Carbon Dioxide	4 Inferred	Read/Write
4441	Nist14 – Mol % of Argon	4 Inferred	Read/Write
4443	Nist14 – Mol % of Ethylene	4 Inferred	Read/Write
4445	Nist14 – Mol % of Nitrogen	4 Inferred	Read/Write
4447	Nist14 – Mol % of Oxygen	4 Inferred	Read/Write
4449	Nist14 – Mol % of Carbon Monoxide	4 Inferred	Read/Write
4451	Nist14 – Mol % of Hydrogen Sulfide	4 Inferred	Read/Write
4453	Nist14 – Mol % of n-Pentane	4 Inferred	Read/Write
4455	Nist14 – Mol % of i-Pentane	4 Inferred	Read/Write
4457	Nist14 – Mol % of n-Hexane	4 Inferred	Read/Write
4459	Nist14 – Mol % of i-Hexane	4 Inferred	Read/Write
4461	Nist14 – Mol % of n-Heptane	4 Inferred	Read/Write
4463	Meter#1 Nist14 – Density.b Override	6 Inferred	Read/Write
4465	Meter#2 Nist14 – Density.b Override	6 Inferred	Read/Write
4467-4469	Spare		

Modbus Address Table – 2x16 Bits Integer

ADDRESS	DESCRIPTION	DECIMAL	READ/WRITE
4471	Meter #1 Forward Flow Rate Threshold#1	2 Inferred	Read/Write
4473	Meter #1 Forward Flow Rate Threshold#2	2 Inferred	Read/Write
4475	Meter #1 Forward Flow Rate Threshold#3	2 Inferred	Read/Write
4477	Meter #1 Forward Flow Rate Threshold#4	2 Inferred	Read/Write
4479	Meter #1 Forward Linear Factor #1	6 Inferred	Read/Write
4481	Meter #1 Forward Linear Factor #2	6 Inferred	Read/Write
4483	Meter #1 Forward Linear Factor #3	6 Inferred	Read/Write
4485	Meter #1 Forward Linear Factor #4	6 Inferred	Read/Write
4487	Meter #2 Forward Flow Rate Threshold#1	2 Inferred	Read/Write
4489	Meter #2 Forward Flow Rate Threshold#2	2 Inferred	Read/Write
4491	Meter #2 Forward Flow Rate Threshold#3	2 Inferred	Read/Write
4493	Meter #2 Forward Flow Rate Threshold#4	2 Inferred	Read/Write
4495	Meter #2 Forward Linear Factor #1	6 Inferred	Read/Write
4497	Meter #2 Forward Linear Factor #2	6 Inferred	Read/Write
4499	Meter #2 Forward Linear Factor #3	6 Inferred	Read/Write
4501	Meter #2 Forward Linear Factor #4	6 Inferred	Read/Write
4503	Meter #1 Water Salinity	2 Inferred	Read/Write
4505	Meter #2 Water Salinity	2 Inferred	Read/Write
4507	Meter#1 Flowing Density Override for Water Prod.	4 Inferred	Read/Write
4509	Meter#2 Flowing Density Override for Water Prod.	4 Inferred	Read/Write
4511-4515	Spare		
4517	Meter#1 PID Output %	2 Inferred	Read/Write
4519	Meter#1 PID Flow	2 Inferred	Read/Write
4521	Meter#1 PID Flow Set Point	2 Inferred	Read/Write
4523	Meter#1 PID Flow Controller Gain	2 Inferred	Read/Write
4525	Meter#1 PID Flow Controller Reset(M	2 Inferred	Read/Write
4527	Meter#1 PID Pressure Maximum	2 Inferred	Read/Write
4529	Meter#1 PID Pres.Set Point	2 Inferred	Read/Write
4531	Meter#1 PID Pres.Controller Gain	2 Inferred	Read/Write
4533	Meter#1 PID Pres.Controller Reset(M.)	2 Inferred	Read/Write
4535	Meter#1 PID Minimum Output %	2 Inferred	Read/Write
4537	Meter#1 PID Maximum Output %	2 Inferred	Read/Write
4539	Meter#2 PID Output %	2 Inferred	Read/Write
4541	Meter#2 PID Flow Maximum	2 Inferred	Read/Write
4543	Meter#2 PID Flow Set Point	2 Inferred	Read/Write
4545	Meter#2 PID Flow Controller Gain	2 Inferred	Read/Write
4547	Meter#2 PID Flow Controller Reset(M.)	2 Inferred	Read/Write
4549	Meter#2 PID Pressure Maximum	2 Inferred	Read/Write
4551	Meter#2 PID Pres.Set Point	2 Inferred	Read/Write
4553	Meter#2 PID Pres.Controller Gain	2 Inferred	Read/Write
4555	Meter#2 PID Pres.Controller Reset(M.)	2 Inferred	Read/Write
4557	Meter#2 PID Minimum Output %	2 Inferred	Read/Write
4559	Meter#2 PID Maximum Output %	2 Inferred	Read/Write
4561	Meter#1 UGC Constant K0	6 Inferred	Read/Write
4563	Meter#2 UGC Constant K0	6 Inferred	Read/Write
4565-4569	Spare		

Modbus Address Table – 2x16 Bits Integer

ADDRESS	DESCRIPTION	DECIMAL	READ/WRITE
4571	Previous Batch Meter #1 Forward Gross Batch Total	1 Inferred	Read
4573	Previous Batch Meter #1 Forward Net Batch Total	1 Inferred	Read
4575	Previous Batch Meter #1 Forward Mass Batch Total	2 Inferred	Read
4577	Previous Batch Meter #2 Forward Gross Batch Total	1 Inferred	Read
4579	Previous Batch Meter #2 Forward Net Batch Total	1 Inferred	Read
4581	Previous Batch Meter #2 Forward Mass Batch Total	2 Inferred	Read
4583	Previous Batch Station Forward Gross Batch Total	1 Inferred	Read
4585	Previous Batch Station Forward Net Batch Total	1 Inferred	Read
4587	Previous Batch Station Forward Mass Batch Total	2 Inferred	Read
4589	Previous Batch Meter #1 Reverse Gross Batch Total	1 Inferred	Read
4591	Previous Batch Meter #1 Reverse Net Batch Total	1 Inferred	Read
4593	Previous Batch Meter #1 Reverse Mass Batch Total	2 Inferred	Read
4595	Previous Batch Meter #2 Reverse Gross Batch Total	1 Inferred	Read
4597	Previous Batch Meter #2 Reverse Net Batch Total	1 Inferred	Read
4599	Previous Batch Meter #2 Reverse Mass Batch Total	2 Inferred	Read
4601	Previous Batch Station Reverse Gross Batch Total	1 Inferred	Read
4603	Previous Batch Station Reverse Net Batch Total	1 Inferred	Read
4605	Previous Batch Station Reverse Mass Batch Total	2 Inferred	Read
4607-4613	Previous Batch Meter#1 Product Name	16 Chars	Read
4615-4655	Spare		

Modbus Address Table – 2x16 Bits Integer

ADDRESS	DESCRIPTION	DECIMAL	READ/WRITE
4657	Meter #1 DP Low @4mA	4 Inferred	Read/Write
4659	Meter #1 DP Low @20mA	4 Inferred	Read/Write
4661	Meter #1 DP Lo-Limit	4 Inferred	Read/Write
4663	Meter #1 DP Hi-Limit	4 Inferred	Read/Write
4665	Meter #1 DP Maintenance	4 Inferred	Read/Write
4667	Meter #1 Temperature @4mA	1 Inferred	Read/Write
4669	Meter #1 Temperature @20mA	1 Inferred	Read/Write
4671	Meter #1 Temperature Lo-Limit	1 Inferred	Read/Write
4673	Meter #1 Temperature Hi-Limit	1 Inferred	Read/Write
4675	Meter #1 Temperature Maintenance	1 Inferred	Read/Write
4677	Meter #1 Pressure @4mA	1 Inferred	Read/Write
4679	Meter #1 Pressure @20mA	1 Inferred	Read/Write
4681	Meter #1 Pressure Lo-Limit	1 Inferred	Read/Write
4683	Meter #1 Pressure Hi-Limit	1 Inferred	Read/Write
4685	Meter #1 Pressure Maintenance	1 Inferred	Read/Write
4687	Meter #1 Density/Gravity @4mA	4 or 1 Inferred	Read/Write
4689	Meter #1 Density/Gravity @20mA	4 or 1 Inferred	Read/Write
4691	Meter #1 Density/Gravity Lo-Limit	4 or 1 Inferred	Read/Write
4693	Meter #1 Density/Gravity Hi-Limit	4 or 1 Inferred	Read/Write
4695	Meter #1 Density/Gravity Maintenance	4 or 1 Inferred	Read/Write
4697	Meter #1 Density Temp. @4mA	1 Inferred	Read/Write
4699	Meter #1 Density Temp. @20mA	1 Inferred	Read/Write
4701	Meter #1 Density Temp. Lo-Limit	1 Inferred	Read/Write
4703	Meter #1 Density Temp. Hi-Limit	1 Inferred	Read/Write
4705	Meter #1 Density Temp. Maintenance	1 Inferred	Read/Write
4707	Meter #1 DP High @4mA	4 Inferred	Read/Write
4709	Meter #1 DP High @20mA	4 Inferred.	Read/Write
4711-4715	Spare		
4717	Meter #1 Dens.Correction Factor	5 Inferred	Read/Write
4719	Meter #1 Dens.Period Low Limit	3 Inferred	Read/Write
4721	Meter #1 Dens.Period High Limit	3 Inferred	Read/Write
4723	UGC2 Calibration Temperature	3 Inferred	Read/Write
4725	Spare		
4727	Meter #2 DP Low @4mA	4 Inferred	Read/Write
4729	Meter #2 DP Low @20mA	4 Inferred	Read/Write
4731	Meter #2 DP Low Lo-Limit	4 Inferred	Read/Write
4733	Meter #2 DP Low Hi-Limit	4 Inferred	Read/Write
4735	Meter #2 DP Low Maintenance	4 Inferred	Read/Write
4737	Meter #2 Temperature @4mA	1 Inferred	Read/Write
4739	Meter #2 Temperature @20mA	1 Inferred	Read/Write
4741	Meter #2 Temperature Lo-Limit	1 Inferred	Read/Write
4743	Meter #2 Temperature Hi-Limit	1 Inferred	Read/Write
4745	Meter #2 Temperature Maintenance	1 Inferred	Read/Write
4747	Meter #2 Pressure @4mA	1 Inferred	Read/Write
4749	Meter #2 Pressure @20mA	1 Inferred	Read/Write
4751	Meter #2 Pressure Lo-Limit	1 Inferred	Read/Write

Modbus Address Table – 2x16 Bits Integer

ADDRESS	DESCRIPTION	DECIMAL	READ/WRITE
4753	Meter #2 Pressure Hi-Limit	1 Inferred	Read/Write
4755	Meter #2 Pressure Maintenance	1 Inferred	Read/Write
4757	Meter #2 Density/Gravity @4mA	4 or 1 Inferred	Read/Write
4759	Meter #2 Density/Gravity @20mA	4 or 1 Inferred	Read/Write
4761	Meter #2 Density/Gravity Lo-Limit	4 or 1 Inferred	Read/Write
4763	Meter #2 Density/Gravity Hi-Limit	4 or 1 Inferred	Read/Write
4765	Meter #2 Density/Gravity Maintenance	4 or 1 Inferred	Read/Write
4767	Meter #2 Density Temp. @4mA	1 Inferred	Read/Write
4769	Meter #2 Density Temp. @20mA	1 Inferred	Read/Write
4771	Meter #2 Density Temp. Lo-Limit	1 Inferred	Read/Write
4773	Meter #2 Density Temp. Hi-Limit	1 Inferred	Read/Write
4775	Meter #2 Density Temp. Maintenance	1 Inferred	Read/Write
4777	Meter #2 DP High @4mA	4 Inferred	Read/Write
4779	Meter #2 DP High @20mA	4 Inferred	Read/Write
4781-4785	Spare		
4787	Meter #2 Dens.Correction Factor	5 Inferred	Read/Write
4789	Meter #2 Dens.Period Low Limit	3 Inferred	Read/Write
4791	Meter #2 Dens.Period High Limit	3 Inferred	Read/Write
4793-4795	Spare		
4797	Spare#1 @4mA	4 Inferred	Read/Write
4799	Spare#1 @20mA	4 Inferred	Read/Write
4801	Spare#1 Lo-Limit	4 Inferred	Read/Write
4803	Spare#1 Hi-Limit	4 Inferred	Read/Write
4805	Spare#1 Maintenance	4 Inferred	Read/Write
4807	Spare#2 @4mA	4 Inferred	Read/Write
4809	Spare#2 @20mA	4 Inferred	Read/Write
4811	Spare#2 Lo-Limit	4 Inferred	Read/Write
4813	Spare#2 Hi-Limit	4 Inferred	Read/Write
4815	Spare#2 Maintenance	4 Inferred	Read/Write
4817	GM/CC Conversion Factor	6 Inferred	Read/Write
4819	Spare		
4821	Spare		
4823	Run Switch Low Set Point	2 Inferred	Read/Write
4825	Run Switch High Set Point	2 Inferred	Read/Write
4827	Atmospheric Pressure PSIA	3 Inferred	Read/Write
4829	Pulse Output Volume #1 Pulses/Unit	3 Inferred	Read/Write
4831	Pulse Output Volume #2 Pulses/Unit	3 Inferred	Read/Write
4833	Analog Output #1 at 4 mA		
4835	Analog Output #1 at 20 mA		
4837	Analog Output #2 at 4 mA		
4839	Analog Output #2 at 20mA		
4841	Analog Output #3 at 4 mA		
4843	Analog Output #3 at 20mA		
4845	Analog Output #4 at 4 mA		
4847	Analog Output #4 at 20mA		
4849	Spare		

Modbus Address Table – 2x16 Bits Integer

ADDRESS	DESCRIPTION	DECIMAL	READ/WRITE
4851	Meter #1 Density Press. @4mA	1 Inferred	Read/Write
4853	Meter #1 Density Press. @20mA	1 Inferred	Read/Write
4855	Meter #1 Density Press. Lo-Limit	1 Inferred	Read/Write
4857	Meter #1 Density Press. Hi-Limit	1 Inferred	Read/Write
4859	Meter #1 Density Press. Maintenance	1 Inferred	Read/Write
4861	Meter #2 Density Press. @4mA	1 Inferred	Read/Write
4863	Meter #2 Density Press. @20mA	1 Inferred	Read/Write
4865	Meter #2 Density Press. Lo-Limit	1 Inferred	Read/Write
4867	Meter #2 Density Press. Hi-Limit	1 Inferred	Read/Write
4869	Meter #2 Density Press. Maintenance	1 Inferred	Read/Write
4871	Meter#1 PID Auto/Manual	0 Inferred	Read/Write
4873	Meter#1 PID Flow Loop Used (1=Yes)	0 Inferred	Read/Write
4875	Meter#1 PID Flow Direct/Reverse Act	0 Inferred	Read/Write
4877	Meter#1 PID Pressure Loop Used (1=Yes)	0 Inferred	Read/Write
4879	Meter#1 PID Pressure Direct/Reverse Act	0 Inferred	Read/Write
4881	Meter#1 PID Flow Loop in Service	0 Inferred	Read/Write
4883	Meter#1 PID Pressure Loop in Service	0 Inferred	Read/Write
4885	Meter#1 PID 0=Low,1=High Signal	0 Inferred	Read/Write
4887	Meter#1 PID Flow Base 0=Gross,1=Net,2=Mass	0 Inferred	Read/Write
4889	Meter#2 PID Auto/Manual	0 Inferred	Read/Write
4891	Meter#2 PID Flow Loop Used (1=Yes)	0 Inferred	Read/Write
4893	Meter#2 PID Flow Direct/Reverse Act	0 Inferred	Read/Write
4895	Meter#2 PID Pres.Loop Used (1=Yes)	0 Inferred	Read/Write
4897	Meter#2 PID Pres.Direct/Reverse Act	0 Inferred	Read/Write
4899	Meter#2 PID Flow Loop in Service	0 Inferred	Read/Write
4901	Meter#2 PID Pres.Loop in Service	0 Inferred	Read/Write
4903	Meter#2 PID 0=Low,1=High Signal	0 Inferred	Read/Write
4905	Meter#2 PID Flow Base 0=Gross,1=Net,2=Mass	0 Inferred	Read/Write
4907-4909	Spare		
4911	Meter #1 Mass Flow Rate Override	1 Inferred	Read/Write
4913	Meter #2 Mass Flow Rate Override	1 Inferred	Read/Write
4915	Spare		
4917	Spare		
4919	Spare		
4921	Meter #1 Reverse Flow Rate Threshold#1	2 Inferred	Read/Write
4923	Meter #1 Reverse Flow Rate Threshold#2	2 Inferred	Read/Write
4925	Meter #1 Reverse Flow Rate Threshold#3	2 Inferred	Read/Write
4927	Meter #1 Reverse Flow Rate Threshold#4	2 Inferred	Read/Write
4929	Meter #1 Reverse Linear Factor #1	6 Inferred	Read/Write
4931	Meter #1 Reverse Linear Factor #2	6 Inferred	Read/Write
4933	Meter #1 Reverse Linear Factor #3	6 Inferred	Read/Write
4935	Meter #1 Reverse Linear Factor #4	6 Inferred	Read/Write
4937	Meter #2 Reverse Flow Rate Threshold#1	2 Inferred	Read/Write
4939	Meter #2 Reverse Flow Rate Threshold#2	2 Inferred	Read/Write
4941	Meter #2 Reverse Flow Rate Threshold#3	2 Inferred	Read/Write
4943	Meter #2 Reverse Flow Rate Threshold#4	2 Inferred	Read/Write
4945	Meter #2 Reverse Linear Factor #1	6 Inferred	Read/Write
4947	Meter #2 Reverse Linear Factor #2	6 Inferred	Read/Write
4949	Meter #2 Reverse Linear Factor #3	6 Inferred	Read/Write
4951	Meter #2 Reverse Linear Factor #4	6 Inferred	Read/Write
4953	Meter #1 Yesterday Reverse Cum. Gross Total	1 inferred	Read
4955	Meter #1 Yesterday Reverse Cum. Net Total	1 Inferred	Read

Modbus Address Table – 2x16 Bits Integer

ADDRESS	DESCRIPTION	DECIMAL	READ/WRITE
4957	Meter #1 Yesterday Reverse Cum. Mass Total	2 Inferred	Read
4959	Meter #1 Previous Batch Reverse Cum. Gross Total	1 Inferred	Read
4961	Meter #1 Previous Batch Reverse Cum. Net Total	1 Inferred	Read
4963	Meter #1 Previous Batch Reverse Cum. Mass Total	2 Inferred	Read
4965	Meter #2 Yesterday Reverse Cum. Gross Total	1 inferred	Read
4967	Meter #2 Yesterday Reverse Cum. Net Total	1 Inferred	Read
4969	Meter #2 Yesterday Reverse Cum. Mass Total	2 Inferred	Read
4971	Meter #2 Previous Batch Reverse Cum. Gross Total	1 Inferred	Read
4973	Meter #2 Previous Batch Reverse Cum. Net Total	1 Inferred	Read
4975	Meter #2 Previous Batch Reverse Cum. Mass Total	2 Inferred	Read
4977-4993	Spare		
4995	Digital Inputs Bits	0 Inferred	Read
4997	Digital Outputs Bits	0 Inferred	Read
4999	Ticks Left	0 Inferred	Read
5001-5039	Reserved		

Modbus Address Table – 2x16 Bits Integer

ADDRESS	DESCRIPTION	DECIMAL	READ/WRITE
Scratch Pad for Program Variables – (Long Integer) 5041,5043-5079			
Sratch Pad – Program Variable Integer			
5041	Program Variable	0 Inferred	Read/Write
5043	Program Variable	0 Inferred	Read/Write
5045	Program Variable	0 Inferred	Read/Write
5047	Program Variable	0 Inferred	Read/Write
5049	Program Variable	0 Inferred	Read/Write
5051	Program Variable	0 Inferred	Read/Write
5053	Program Variable	0 Inferred	Read/Write
5055	Program Variable	0 Inferred	Read/Write
5057	Program Variable	0 Inferred	Read/Write
5059	Program Variable	0 Inferred	Read/Write
5061	Program Variable	0 Inferred	Read/Write
5063	Program Variable	0 Inferred	Read/Write
5065	Program Variable	0 Inferred	Read/Write
5067	Program Variable	0 Inferred	Read/Write
5069	Program Variable	0 Inferred	Read/Write
5071	Program Variable	1 Inferred	Read/Write
5073	Program Variable	1 Inferred	Read/Write
5075	Program Variable	1 Inferred	Read/Write
5077	Program Variable	1 Inferred	Read/Write
5079	Program Variable	1 Inferred	Read/Write
Slave Unit Variables			
5081	Variable #1	0 Inferred	Read/Write
5083	Variable #2	0 Inferred	Read/Write
5085	Variable #3	0 Inferred	Read/Write
5087	Variable #4	0 Inferred	Read/Write
5089	Variable #5	0 Inferred	Read/Write
5091	Variable #6	0 Inferred	Read/Write
5093	Variable #7	0 Inferred	Read/Write
5095	Variable #8	0 Inferred	Read/Write
5097	Variable #9	0 Inferred	Read/Write
5099	Variable #10	0 Inferred	Read/Write

Modbus Address Table – 2x16 Bits Integer

ADDRESS	DESCRIPTION	DECIMAL	READ/WRITE
Previous Batch Data			
3385	Meter#1 Batch Opening Date	0 Inferred	Read
3387	Meter#1 Batch Opening Time	0 Inferred	Read
3389	Meter#1 Batch Closing Date	0 Inferred	Read
3391	Meter#1 Batch Closing Time	0 Inferred	Read
3393	Meter#1 Batch Product Number	0 Inferred	Read
3395	Meter#1 Batch Number	0 Inferred	Read
3397	Meter#1 Batch Table	0 Inferred	Read
3401	Meter#1 Batch Opening Forward Gross	1 Inferred	Read
3403	Meter#1 Batch Opening Forward Net	1 Inferred	Read
3405	Meter#1 Batch Opening Forward Mass	2 Inferred	Read
3407-3413	Reversed		
3415	Meter#1 Forward FWA DP	4 Inferred	Read
3417	Meter#1 Forward FWA CTL	5 Inferred	Read
3419	Meter#1 Forward FWA CPL	5 Inferred	Read
3421	Meter#1 Forward FWA SG60	6 Inferred	Read
3423	Meter#1 Reverse FWA DP	4 Inferred	Read
3425	Meter#1 Reverse FWA CTL	5 Inferred	Read
3427	Meter#1 Reverse FWA CPL	5 Inferred	Read
3429	Meter#1 Reverse FWA SG60	6 Inferred	Read
3745	Meter#1 FWA Temperature	1 Inferred	Read
3747	Meter#1 FWA Pressure	1 Inferred	Read
3749	Meter#1 FWA Observed GM/CC	6 Inferred	Read
3751	Meter#1 FWA GM/CC@60	6 Inferred	Read
3753	Meter#1 FWA K/CD/LMF	6 Inferred	Read
3755	Meter#2 FWA Temperature	1 Inferred	Read
3757	Meter#2 FWA Pressure	1 Inferred	Read
3759	Meter#2 FWA Observed GM/CC	6 Inferred	Read
3761	Meter#2 FWA GM/CC@60	6 Inferred	Read
3763	Meter#2 FWA K/CD/LMF	6 Inferred	Read
3765	Meter#1 Reverse FWA Temperature	1 Inferred	Read
3767	Meter#1 Reverse FWA Pressure	1 Inferred	Read
3769	Meter#1 Reverse FWA Observed GM/CC	6 Inferred	Read
3771	Meter#1 Reverse FWA GM/CC@60	6 Inferred	Read
3773	Meter#1 Reverse FWA K/CD/LMF	6 Inferred	Read
3775	Meter#2 Reverse FWA Temperature	1 Inferred	Read
3777	Meter#2 Reverse FWA Pressure	1 Inferred	Read
3779	Meter#2 Reverse FWA Observed GM/CC	6 Inferred	Read
3781	Meter#2 Reverse FWA GM/CC@60	6 Inferred	Read
3783	Meter#2 Reverse FWA K/CD/LMF	6 Inferred	Read
3785	Meter#1 Opening R.Gross Total	1 Inferred	Read
3787	Meter#1 Opening R.Net Total	1 Inferred	Read
3789	Meter#1 Opening R.Mass Total	2 Inferred	Read
4571	Meter #1 Forward Gross Batch Total	1 Inferred	Read
4573	Meter #1 Forward Net Batch Total	1 Inferred	Read
4575	Meter #1 Forward Mass Batch Total	2 Inferred	Read
4577	Meter #2 Forward Gross Batch Total	1 Inferred	Read

Modbus Address Table – 2x16 Bits Integer

ADDRESS	DESCRIPTION	DECIMAL	READ/WRITE
4579	Meter #2 Forward Net Batch Total	1 Inferred	Read
4581	Meter #2 Forward Mass Batch Total	2 Inferred	Read
4583	Station Forward Gross Batch Total	1 Inferred	Read
4585	Station Forward Net Batch Total	1 Inferred	Read
4587	Station Forward Mass Batch Total	2 Inferred	Read
4589	Meter #1 Reverse Gross Batch Total	1 Inferred	Read
4591	Meter #1 Reverse Net Batch Total	1 Inferred	Read
4593	Meter #1 Reverse Mass Batch Total	2 Inferred	Read
4595	Meter #2 Reverse Gross Batch Total	1 Inferred	Read
4597	Meter #2 Reverse Net Batch Total	1 Inferred	Read
4599	Meter #2 Reverse Mass Batch Total	2 Inferred	Read
4601	Station Reverse Gross Batch Total	1 Inferred	Read
4603	Station Reverse Net Batch Total	1 Inferred	Read
4605	Station Reverse Mass Batch Total	2 Inferred	Read
4607-4613	Meter#1 Product Name	16 Chars	Read

Previous Batch Data End

Modbus Address Table – 2x16 Bits Integer

ADDRESS	DESCRIPTION	DECIMAL	READ/WRITE

**Observed Density is the density at the densitometer

Last Hourly Data Area

3029 = Last Hourly Report Request (16 bits Integer, Write only)
Set last hourly report request to 1=Latest, 32=Oldest.

8001-8015	Reserved		
8017	Meter #1 Forward Batch Gross	1 Inferred	Read
8019	Meter #1 Forward Batch Net	1 Inferred	Read
8021	Meter #1 Forward Batch Mass	2 Inferred	Read
8023	Meter #1 Forward Average CTPL	5 Inferred	Read
8025	Meter #1 Forward Average DP	4 Inferred	Read
8027	Meter #1 Forward Average Temperature	1 Inferred	Read
8029	Meter #1 Forward Average Pressure	1 Inferred	Read
8031	Meter #1 Forward Avg. **Observed Dens LB/FT3	3 Inferred	Read
8033	Meter #1 Forward Average Density Temperature	1 Inferred	Read
8035	Meter #1 Forward Average LB/FT3.b	3 Inferred	Read
8037	Meter #1 Forward Average Y Factor	6 Inferred	Read
8039	Meter #1 Forward Average Fa	6 Inferred	Read
8041	Meter #1 Forward Average K/CD/MF	6 Inferred	Read
8043	Meter #1 Forward Average CTL	5 Inferred	Read
8045	Meter #1 Forward Average CPL	5 Inferred	Read
8047	Meter #1 Gross Flow Rate	2 Inferred	Read
8049	Meter #1 Net Flow Rate	2 Inferred	Read
8051	Meter #1 Mass Flow Rate	2 Inferred	Read
8053	Meter #1 CTPL	5 Inferred	Read
8055	Meter #1 DP	4 Inferred	Read
8057	Meter #1 Temperature	1 Inferred	Read
8059	Meter #1 Pressure	1 Inferred	Read
8061	Meter #1 Obverved Density LB/FT3	3 Inferred	Read
8063	Meter #1 Dens.Temperature	1 Inferred	Read
8065	Meter #1 LB/FT3.b	3 Inferred	Read
8067	Meter #1 Y Factor	6 Inferred	Read
8069	Meter #1 Fa Factor	6 Inferred	Read
8071	Meter #1 K/CD/MF	6 Inferred	Read
8073	Meter #1 GM/CC	6 Inferred	Read
8075	Meter #1 CTL	5 Inferred	Read
8077	Meter #1 CPL	5 Inferred	Read
8079	Meter #1 Equilibrium Pressure	3 Inferred	Read
8081	Meter #1 Observed API	1 Inferred	Read
8083	Meter #1 Observed SG	4 Inferred	Read
8085	Meter #1 Reverse Batch Gross	1 Inferred	Read
8087	Meter #1 Reverse Batch Net	1 Inferred	Read
8089	Meter #1 Reverse Batch Mass	2 Inferred	Read
8091	Meter #1 Reverse Average CTPL	5 Inferred	Read
8093	Meter #1 Reverse Average DP	4 Inferred	Read

Modbus Address Table – 2x16 Bits Integer

ADDRESS	DESCRIPTION	DECIMAL	READ/WRITE
8095	Meter #1 Reverse Average Temperature	1 Inferred	Read
8097	Meter #1 Reverse Average Pressure	1 Inferred	Read
8099	Meter #1 Reverse Avg. **Observed Dens LB/FT3	3 Inferred	Read
8101	Meter #1 Reverse Average Dens.Temperature	1 Inferred	Read
8103	Meter #1 Reverse Average LB/FT3.b	3 Inferred	Read
8105	Meter #1 Reverse Average Y Factor	6 Inferred	Read
8107	Meter #1 Reverse Average FA	6 Inferred	Read
8109	Meter #1 Reverse Average K/CD/MF	6 Inferred	Read
8111	Meter #1 Reverse Average CTL	5 Inferred	Read
8113	Meter #1 Table used	0 Inferred	Read
8115	Meter #1 Unit of Measurement	0 Inferred	Read
8117	Meter #1 Reverse Average CPL	5 Inferred	Read
8119	Meter #1 Reverse Average Observed GM/CC	6 Inferred	Read
8121	Meter #1 Forward Average Observed GM/CC	6 Inferred	Read
8123	Meter #1 Reverse Average Density LB/FT3	3 Inferred	Read
8125	Meter #1 Forward Average Density LB/FT3	3 Inferred	Read
8127	Meter #1 Density LB/FT3	3 Inferred	Read
8129	Meter #1 Reverse Previous Hour Gross	1 Inferred	Read
8131	Meter #1 Reverse Previous Hour Mass	2 Inferred	Read
8133	Meter #1 Reverse Previous Hour Net	1 Inferred	Read

*Reverse hourly totals are only available for version 6.10.5 or above

8135	Meter #1 Reverse Cum Gross	1 Inferred	Read
8137	Meter #1 Reverse Cum Net	1 Inferred	Read
8139	Meter #1 Reverse Cum Mass	2 Inferred	Read
8141	Spare		
8143	Meter #1 Forward Cum Gross	1 Inferred	Read
8145	Meter #1 Forward Cum Net	1 Inferred	Read
8147	Meter #1 Forward Cum Mass	2 Inferred	Read
8149	Spare		
8151	Meter #1 Table Used	0 Inferred	Read
8153	Meter #1 Batch Number	0 Inferred	Read
8155	Meter #1 Batch Start Date	0 Inferred	Read
8157	Meter #1 Batch Start Time	0 Inferred	Read
8159	Meter #1 Hour Start Date	0 Inferred	Read
8161	Meter #1 Hour Start Time	0 Inferred	Read
8163	Meter #1 Product Used	0 Inferred	Read
8165	Meter #1 Unit of Measurement	0 Inferred	Read
8167-8173	Meter #1 Product ID	16 Chars.	Read
8175-8177	Meter #1 ID	8 Chars.	Read
8179	Meter #1 Pipe ID	5 Inferred	Read
8181	Meter #1 Orifice ID	5 Inferred	Read
8183	Meter #1 Density Correction Factor	5 Inferred	Read
8185	Meter #1 CTL	5 Inferred	Read
8187	Meter #1 CPL	5 Inferred	Read
8189	Meter #1 Equilibrium Pressure	3 Inferred	Read
8191	Meter #1 Observed API	1 Inferred	Read
8193	Meter #1 Observed SG	4 Inferred	Read
8195	Meter #1 SG@60	4 Inferred	Read
8197	Meter #1 K Factor	3 Inferred	Read
8199-8215	Reserved		
8217	Meter #2 Forward Batch Gross	1 Inferred	Read

Modbus Address Table – 2x16 Bits Integer

ADDRESS	DESCRIPTION	DECIMAL	READ/WRITE
8219	Meter #2 Forward Batch Net	1 Inferred	Read
8221	Meter #2 Forward Batch Mass	2 Inferred	Read
8223	Meter #2 Forward Average CTPL	5 Inferred	Read
8225	Meter #2 Forward Average DP	4 Inferred	Read
8227	Meter #2 Forward Average Temperature	1 Inferred	Read
8229	Meter #2 Forward Average Pressure	1 Inferred	Read
8231	Meter #2 Forward Avg. **Observed Dens.LB/FT3	3 Inferred	Read
8233	Meter #2 Forward Average Density Temperature	1 Inferred	Read
8235	Meter #2 Forward Average LB/FT3.b	3 Inferred	Read
8237	Meter #2 Forward Average Y Factor	6 Inferred	Read
8239	Meter #2 Forward Average Fa	6 Inferred	Read
8241	Meter #2 Forward Average K/CD/MF	6 Inferred	Read
8243	Meter #2 Forward Average CTL	5 Inferred	Read
8245	Meter #2 Forward Average CPL	5 Inferred	Read
8247	Meter #2 Gross Flow Rate	2 Inferred	Read
8249	Meter #2 Net Flow Rate	2 Inferred	Read
8251	Meter #2 Mass Flow Rate	2 Inferred	Read
8253	Meter #2 CTPL	5 Inferred	Read
8255	Meter #2 DP	4 Inferred	Read
8257	Meter #2 Temperature	1 Inferred	Read
8259	Meter #2 Pressure	1 Inferred	Read
8261	Meter #2 **Observed Density LB/FT3	3 Inferred	Read
8263	Meter #2 Dens.Temperature	1 Inferred	Read
8265	Meter #2 LB/FT3.b	3 Inferred	Read
8267	Meter #2 Y Factor	6 Inferred	Read
8269	Meter #2 Fa Factor	6 Inferred	Read
8271	Meter #2 K/CD/MF	6 Inferred	Read
8273	Meter #2 Observed GM/CC	6 Inferred	Read
8275	Meter #2 CTL	5 Inferred	Read
8277	Meter #2 CPL	5 Inferred	Read
8279	Meter #2 Equilibrium Pressure	3 Inferred	Read
8281	Meter #2 API	1 Inferred	Read
8283	Meter #2 SG	4 Inferred	Read
8285	Meter #2 Reverse Batch Gross	1 Inferred	Read
8287	Meter #2 Reverse Batch Net	1 Inferred	Read
8289	Meter #2 Reverse Batch Mass	2 Inferred	Read
8291	Meter #2 Reverse Average CTPL	5 Inferred	Read
8293	Meter #2 Reverse Average DP	4 Inferred	Read
8295	Meter #2 Reverse Average Temperature	1 Inferred	Read
8297	Meter #2 Reverse Average Pressure	1 Inferred	Read
8299	Meter #2 Reverse Average Dens LB/FT3	3 Inferred	Read
8301	Meter #2 Reverse Average Dens.Temperature	1 Inferred	Read
8303	Meter #2 Reverse Average LB/FT3.b	3 Inferred	Read
8305	Meter #2 Reverse Average Y Factor	6 Inferred	Read
8307	Meter #2 Reverse Average FA	6 Inferred	Read
8309	Meter #2 Reverse Average K/CD/MF	6 Inferred	Read
8311	Meter #2 Reverse Average CTL	5 Inferred	Read
8313	Meter #2 Table used	0 Inferred	Read
8315	Meter #2 Unit of Measurement	0 Inferred	Read
8317	Meter #2 Reverse Average CTL	5 Inferred	Read
8319	Meter #2 Reverse Average Observed GM/CC	6 Inferred	Read
8321	Meter #2 Forward Average Observed GM/CC	6 Inferred	Read

Modbus Address Table – 2x16 Bits Integer

ADDRESS	DESCRIPTION	DECIMAL	READ/WRITE
8323	Meter #2 Reverse Average Density LB/FT3	3 Inferred	Read
8325	Meter #2 Forward Average Density LB/FT3	3 Inferred	Read
8327	Meter #2 Density LB/FT3	3 Inferred	Read
8329	Meter #2 Reverse Previous Hour Gross*	1 Inferred	Read
8331	Meter #2 Reverse Previous Hour Mass*	2 Inferred	Read
8333	Meter #2 Reverse Previous Hour Net*	1 Inferred	Read
*Reverse hourly totals are only available for version 6.10.5 or above			
8335	Meter #2 Reverse Cum Gross	1 Inferred	Read
8337	Meter #2 Reverse Cum Net	1 Inferred	Read
8339	Meter #2 Reverse Cum Mass	2 Inferred	Read
8341	Spare		
8343	Meter #2 Forward Cum Gross	1 Inferred	Read
8345	Meter #2 Forward Cum Net	1 Inferred	Read
8347	Meter #2 Forward Cum Mass	2 Inferred	Read
8349	Spare		
8351	Meter #2 Table Used	0 Inferred	Read
8353	Meter #2 Batch Number	0 Inferred	Read
8355	Meter #2 Batch Start Date	0 Inferred	Read
8357	Meter #2 Batch Start Time	0 Inferred	Read
8359	Meter #2 Hour Start Date	0 Inferred	Read
8361	Meter #2 Hour Start Time	0 Inferred	Read
8363	Meter #2 Product Used	0 Inferred	Read
8365	Meter #2 Unit of Measurement	0 Inferred	Read
8367-8373	Meter #2 Product ID	16 Chars.	Read
8375-8377	Meter #2 ID	8 Chars.	Read
8379	Meter #2 Pipe ID	5 Inferred	Read
8381	Meter #2 Orifice ID	5 Inferred	Read
8383	Meter #2 Density Correction Factor	5 Inferred	Read
8385	Meter #2 CTL	5 Inferred	Read
8387	Meter #2 CPL	5 Inferred	Read
8389	Meter #2 Equilibrium Pressure	3 Inferred	Read
8391	Meter #2 Observed API	1 Inferred	Read
8393	Meter #2 Observed SG	4 Inferred	Read
8395	Meter #2 SG@60	4 Inferred	Read
8397	Meter #2 K Factor	3 Inferred	Read
8399-8409	Spare		
8411	Spare #1 Data	4 Inferred	Read
8413	Spare #2 Data	4 Inferred	Read
8415	Meter #1 Reverse Hour Gross Total*	1 Inferred	Read
8417	Meter #1 Reverse Previous Hour Mass Total*	2 Inferred	Read
8419	Meter #1 Reverse Previous Hour Net Total*	1 Inferred	Read
*Reverse hourly totals are only available for version 6.10.5 or above			
8421	Station Gross Flow Rate	2 Inferred	Read
8423	Station Net Flow Rate	2 Inferred	Read
8425	Station Mass Flow Rate	2 Inferred	Read
8427	Spare		
8429	Station Forward Gross Batch Total	1 Inferred	Read
8431	Station Forward Net Batch Total	1 Inferred	Read

Modbus Address Table – 2x16 Bits Integer

ADDRESS	DESCRIPTION	DECIMAL	READ/WRITE
8433	Station Forward Mass Batch Total	2 Inferred	Read
8435	Spare		
8437	Station Forward Gross Cum Total	1 Inferred	Read
8439	Station Forward Net Cum. Total	1 Inferred	Read
8441	Station Forward Mass Cum. Total	2 Inferred	Read
8443	Spare		
8445	Station Reverse Gross Batch Total	1 Inferred	Read
8447	Station Reverse Net Batch Total	1 Inferred	Read
8449	Station Reverse Mass Batch Total	2 Inferred	Read
8451	Spare		
8453	Station Reverse Gross Cum Total	1 Inferred	Read
8455	Station Reverse Net Cum. Total	1 Inferred	Read
8457	Station Reverse Mass Cum. Total	2 Inferred	Read
8459	Spare		
8461	Meter #1 Forward Hour Gross Total	1 Inferred	Read
8463	Meter #1 Forward Hour Mass Total	2 Inferred	Read
8465	Meter #1 Forward Hour Net Total	1 Inferred	Read
8467	Meter #1 Forward Hour Average DP	4 Inferred	Read
8469	Meter #1 Forward Hour Average Temperature	1 Inferred	Read
8471	Meter #1 Forward Hour Average Pressure	1 Inferred	Read
8473	Meter #2 Forward Hour Gross Total	1 Inferred	Read
8475	Meter #2 Forward Hour Mass Total	2 Inferred	Read
8477	Meter #2 Forward Hour Net Total	2 Inferred	Read
8479	Meter #2 Forward Hour Average DP	4 Inferred	Read
8481	Meter #2 Forward Hour Average Temperature	1 Inferred	Read
8483	Meter #2 Forward Hour Average Pressure	1 Inferred	Read
8485	Meter #2 Reverse Hour Gross Total*	1 Inferred	Read
8487	Meter #2 Reverse Previous Hour Mass Total*	2 Inferred	Read
8489	Meter #2 Reverse Previous Hour Net Total*	1 Inferred	Read
8491	Spare		

*Reverse hourly totals are only available for version 6.10.5 or above

Last Hourly Data Area Ends

Modbus Address Table – 2x16 Bits Integer

ADDRESS	DESCRIPTION	DECIMAL	READ/WRITE

Last Hour Data Area

8129	Meter #1 Reverse Hour Gross*	1 Inferred	Read
8131	Meter #1 Reverse Hour Mass*	2 Inferred	Read
8133	Meter #1 Reverse Hour Net*	1 Inferred	Read
8199	Meter #1 Forward Hour Gross	1 Inferred	Read
8201	Meter #1 Forward Hour Mass	2 Inferred	Read
8203	Meter #1 Forward Hour Net	1 Inferred	Read
8205	Meter #1 Forward Hour Average DP	4 Inferred	Read
8207	Meter #1 Forward Hour Average Temperature	1 Inferred	Read
8209	Meter #1 Forward Hour Average Pressure	1 Inferred	Read
8399	Meter #2 Forward Hour Gross	1 Inferred	Read
8401	Meter #2 Forward Hour Mass	2 Inferred	Read
8403	Meter #2 Forward Hour Net	1 Inferred	Read
8405	Meter #2 Forward Hour Average DP	4 Inferred	Read
8407	Meter #2 Forward Hour Average Temperature	1 Inferred	Read
8409	Meter #2 Forward Hour Average Pressure	1 Inferred	Read
8329	Meter #2 Reverse Hour Gross*	1 Inferred	Read
8331	Meter #2 Reverse Hour Mass*	2 Inferred	Read
8333	Meter #2 Reverse Hour Net*	1 Inferred	Read

*Reverse hourly totals are only available for version 6.10.5 or above

Last Hour Data Area (Version 6.10.02 or above)

8795	Meter #1 Forward Batch Gross	1 Inferred	Read
8797	Meter #1 Forward Batch Net	1 Inferred	Read
8799	Meter #1 Forward Batch Mass	2 Inferred	Read
8801	Meter #1 Forward FWA Density LB/FT3	3 Inferred	Read
8803	Meter #1 Forward FWA K/CD/MF	6 Inferred	Read
8805	Meter #1 Batch Number	0 Inferred	Read
8807	Meter #1 Density Correction Factor	5 Inferred	Read
8809	Meter #1 Forward Hourly FWA Temperature	1 Inferred	Read
8811	Meter #1 Forward Hourly FWA Pressure	1 Inferred	Read
8813	Last Hour Data - Date	0 Inferred	Read
8815	Last Hour Data - Hour	0 Inferred	Read

Last Hour Data Area Ends

Modbus Address Table – 2x16 Bits Integer

Yesterday Data

ADDRESS	DESCRIPTION	DECIMAL	READ/WRITE
3721	Meter#1 Forward Daily Gross Total	1 Inferred	Read
3723	Meter#1 Forward Daily Net Total	1 Inferred	Read
3725	Meter#1 Forward Daily Mass Total	2 Inferred	Read
3727	Meter#2 Forward Daily Gross Total	1 Inferred	Read
3729	Meter#2 Forward Daily Net Total	1 Inferred	Read
3731	Meter#2 Forward Daily Mass Total	2 Inferred	Read
3733	Station Forward Daily Gross Total	1 Inferred	Read
3735	Station Forward Daily Net Total	1 Inferred	Read
3737	Station Forward Daily Mass Total	2 Inferred	Read
4191	Meter#1 Reverse Daily Gross Total	1 Inferred	Read
4193	Meter#1 Reverse Daily Net Total	1 Inferred	Read
4195	Meter#1 Reverse Daily Mass Total	2 Inferred	Read
3213	Meter #1 Forward Cum.Gross Total	1 inferred	Read
3215	Meter #1 Forward Cum.Net Total	1 Inferred	Read
3217	Meter #1 Forward Cum Mass Total	2 Inferred	Read
3307	Meter #2 Forward Cum.Gross Total	1 inferred	Read
3309	Meter #2 Forward Cum.Net Total	1 Inferred	Read
3311	Meter #2 Forward Cum Mass Total	2 Inferred	Read
4953	Meter #1 Reverse Cum. Gross Total	1 inferred	Read
4955	Meter #1 Reverse Cum. Net Total	1 Inferred	Read
4957	Meter #1 Reverse Cum. Mass Total	2 Inferred	Read
4965	Meter #2 Reverse Cum. Gross Total	1 inferred	Read
4967	Meter #2 Reverse Cum. Net Total	1 Inferred	Read
4969	Meter #2 Reverse Cum. Mass Total	2 Inferred	Read
8711	Meter#2 Reverse Daily Gross Total*	1 Inferred	Read
8713	Meter#2 Reverse Daily Net Total*	1 Inferred	Read
8715	Meter#2 Reverse Daily Mass Total*	2 Inferred	Read
8717	Station Reverse Daily Gross Total*	1 Inferred	Read
8719	Station Reverse Daily Net Total*	1 Inferred	Read
8721	Station Reverse Daily Mass Total*	2 Inferred	Read

*Reverse daily totals are only available for version 6.10.5 or above

Modbus Address Table – 2x16 Bits Integer

ADDRESS	DESCRIPTION	DECIMAL	READ/WRITE
Yesterday Data Area (Version 6.10.02 or above)			
8749	Date	0 Inferred	Read
8751	Meter #1 Table Used	0 Inferred	Read
8753	Meter #1 Opening Forward GROSS Total	1 Inferred	Read
8755	Meter #1 Opening Forward NET Total	1 Inferred	Read
8757	Meter #1 Opening Forward MASS Total	2 Inferred	Read
8759	Meter #1 Forward Daily GROSS Total	1 Inferred	Read
8761	Meter #1 Forward Daily NET Total	1 Inferred	Read
8763	Meter #1 Forward Daily MASS Total	2 Inferred	Read
8765	Meter #1 Forward FWA Temperature	1 Inferred	Read
8767	Meter #1 Forward FWA Pressure	1 Inferred	Read
8769	Meter #1 Forward FWA Density LB/FT3	3 Inferred	Read
8771	Meter #1 Forward FWA Density Temp	2 Inferred	Read
8773	Meter #1 Forward FWA LB/FT3.b	3 Inferred	Read
8775	Meter #1 Forward FWA K/CD/LMF Factor	6 Inferred	Read
8777	Meter #1 Forward FWA CTL	5 Inferred	Read
8779	Meter #1 Forward FWA CPL	5 Inferred	Read
8781	Meter #1 Batch Number	0 Inferred	Read
8783	Meter #1 Batch Start Date	0 Inferred	Read
8785	Meter #1 Batch Start Time	0 Inferred	Read
8787	Meter #1 Date	0 Inferred	Read
8789	Meter #1 Time	0 Inferred	Read
8791	Meter #1 Dens.Corr.Factor	5 Inferred	Read
8793	Meter #1 K Factor	3 Inferred	Read

Yesterday Data Area Ends

Modbus Address Table – 2x16 Bits Integer

ADDRESS	DESCRIPTION	DECIMAL	READ/WRITE

***Non-resettable gross and net accumulated volume will roll over at 99999999.9.**
***Non-resettable mass accumulated volume will roll over at 9999999.99.**
**Observed Density is the density at the densitometer

Current Data Area

9001	Meter #1 Calculation Type Flag	0 Inferred	Read
9003	Meter #1 Flow Flag/Flow Dir Flow Direction B0-B3 : 1:Reverse, 0:Forward Flow Flag B4-B7 : 1:Meter#1 Bi-Dir,2:Meter#2 Bi-Dir,3:Meter#1/#2 Bi-Dir	0 Inferred	Read
9005	Meter #1 Alarm Status Flag	0 Inferred	Read
9007	Meter #1 Forward Batch GROSS	1 Inferred	Read
9009	Meter #1 Forward Batch NET	1 Inferred	Read
9011	Meter #1 Forward Batch MASS	2 Inferred	Read
9013	Meter #1 Forward Average CTPL	5 Inferred	Read
9015	Meter #1 Forward Average DP	4 Inferred	Read
9017	Meter #1 Forward Average Temperature	1 Inferred	Read
9019	Meter #1 Forward Average Pressure	1 Inferred	Read
9021	Meter #1 Forward Avg **Observed Dens LB/FT3	3 Inferred	Read
9023	Meter #1 Forward Average Dens.Temperature	1 Inferred	Read
9025	Meter #1 Forward Average LB/FT3.b	3 Inferred	Read
9027	Meter #1 Forward Average Y Factor	6 Inferred	Read
9029	Meter #1 Forward Average Fa Factor	6 Inferred	Read
9031	Meter #1 Forward Average K/CD/MF Factor	6 Inferred	Read
9033	Meter #1 Forward Average CTL	5 Inferred	Read
9035	Meter #1 Forward Average CPL	5 Inferred	Read
9037	Meter #1 GROSS Flow Rate	2 Inferred	Read
9039	Meter #1 NET Flow Rate	2 Inferred	Read
9041	Meter #1 MASS Flow Rate	2 Inferred	Read
9043	Meter #1 CTPL	5 Inferred	Read
9045	Meter #1 DP	4 Inferred	Read
9047	Meter #1 Temperature	1 Inferred	Read
9049	Meter #1 Pressure	1 Inferred	Read
9051	Meter #1 **Observed Density LB/FT3	3 Inferred	Read
9053	Meter #1 Densitometer Temperature	1 Inferred	Read
9055	Meter #1 LB/FT3.b	3 Inferred	Read
9057	Meter #1 Y Factor	6 Inferred	Read
9059	Meter #1 Fa Factor	6 Inferred	Read
9061	Meter #1 K/CD/MF Factor	6 Inferred	Read
9063	Meter #1 Observed GM/CC	6 Inferred	Read
9065	Meter #1 CTL Factor	5 Inferred	Read
9067	Meter #1 CPL Factor	5 Inferred	Read
9069	Meter #1 Equilibrium Pressure	3 Inferred	Read
9071	Meter #1 Observed API	1 Inferred	Read
9073	Meter #1 Observed SG	4 Inferred	Read
9075	Meter #1 Reverse Batch GROSS	1 Inferred	Read
9077	Meter #1 Reverse Batch NET	1 Inferred	Read
9079	Meter #1 Reverse Batch MASS	2 Inferred	Read
9081	Meter #1 Reverse Average CTPL	5 Inferred	Read
9083	Meter #1 Reverse Average DP	4 Inferred	Read
9085	Meter #1 Reverse Average Temperature	1 Inferred	Read
9087	Meter #1 Reverse Average Pressure	1 Inferred	Read
9089	Meter #1 Reverse Average **Observed LB/FT3	3 Inferred	Read
9091	Meter #1 Reverse Average Dens.Temperature	1 Inferred	Read
9093	Meter #1 Reverse Average LB/FT3.b	3 Inferred	Read

Modbus Address Table – 2x16 Bits Integer

ADDRESS	DESCRIPTION	DECIMAL	READ/WRITE
9095	Meter #1 Reverse Average Y Factor	6 Inferred	Read
9097	Meter #1 Reverse Average Fa Factor	6 Inferred	Read
9099	Meter #1 Reverse Average K/CD/MF Factor	6 Inferred	Read
9101	Meter #1 Reverse Average CTL	5 Inferred	Read
9103	Meter #1 Table used	0 Inferred	Read
9105	Meter #1 Unit of Measurement	0 Inferred	Read
9107	Meter #1 Reverse Average CPL	5 Inferred	Read
9109	Meter #1 Reverse Observed Average GM/CC	6 Inferred	Read
9111	Meter #1 Forward Observed Average GM/CC	6 Inferred	Read
9113	Meter #1 Meter Factor	6 Inferred	Read
9115	Meter #1 Linear Factor	6 Inferred	Read
9117	Meter #1 Forward FWA Observed SG	4 Inferred	Read
9119	Meter #1 Forward FWA SG@60	4 Inferred	Read
9121	Meter #1 Reverse FWA Observed SG	4 Inferred	Read
9123	Meter #1 Reverse FWA SG@60	4 Inferred	Read
9125	Meter #1 Reverse Cum GROSS	1 Inferred	Read
9127	Meter #1 Reverse Cum NET	1 Inferred	Read
9129	Meter #1 Reverse Cum MASS	2 Inferred	Read
9131	Meter #1 Forward Average Density LB/FT3	3 Inferred	Read
9133	Meter #1 Forward Cum GROSS	1 Inferred	Read
9135	Meter #1 Forward Cum NET	1 Inferred	Read
9137	Meter #1 Forward Cum MASS	2 Inferred	Read
9139	Meter #1 Reverse Average Density LB/FT3	3 Inferred	Read
9141	Meter #1 Table Used	0 Inferred	Read
9143	Meter #1 Batch Number	0 Inferred	Read
9145	Meter #1 Batch Start Date	0 Inferred	Read
9147	Meter #1 Batch Start Time	0 Inferred	Read
9149-9151	Reserved		
9153	Meter #1 Product Used	0 Inferred	Read
9155	Meter #1 Unit of Measurement	0 Inferred	Read
9157-9163	Meter #1 Product ID	16 Chars.	Read
9165-9167	Meter #1 ID	8 Chars.	Read
9169	Meter #1 Pipe ID Inches	5 Inferred	Read
9171	Meter #1 Orifice ID Inches	5 Inferred	Read
9173	Meter #1 Density Correction Factor	5 Inferred	Read
9175	Meter #1 CTL	5 Inferred	Read
9177	Meter #1 CPL	5 Inferred	Read
9179	Meter #1 Equilibrium Pressure	3 Inferred	Read
9181	Meter #1 Observed API	1 Inferred	Read
9183	Meter #1 Observed SG	4 Inferred	Read
9185	Meter #1 SG@60	4 Inferred	Read
9187	Meter #1 K Factor	3 Inferred	Read
9189	Meter #1 Forward CD/LMF	6 Inferred	Read
9191	Meter #1 Reverse CD/LMF	6 Inferred	Read
9193	Meter #1 Forward Cumulative Net Total	0 Inferred	Read
9195	Meter #1 Forward Cumulative Mass Total	1 Inferred	Read
9197	Meter #1 Reverse Cumulative Net Total	0 Inferred	Read
9199	Meter #1 Reverse Cumulative Mass Total	1 Inerred	Read

Modbus Address Table – 2x16 Bits Integer

ADDRESS	DESCRIPTION	DECIMAL	READ/WRITE
	**Observed Density is the density at the densitometer		
9201	Meter #2 Calculation Type Flag	0 Inferred	Read
9203	Meter #2 Flow Flag/Flow Dir	0 Inferred	Read
	Flow Direction B0-B3 : 1:Reverse, 0:Forward		
	Flow Flag B4-B7 : 1:Meter#1 Bi-Dir,2:Meter#2 Bi-Dir,3:Meter#1/#2 Bi-Dir		
9205	Meter #2 Alarm Status Flag	0 Inferred	Read
9207	Meter #2 Forward Batch GROSS	1 Inferred	Read
9209	Meter #2 Forward Batch NET	1 Inferred	Read
9211	Meter #2 Forward Batch MASS	2 Inferred	Read
9213	Meter #2 Forward Average CTPL	5 Inferred	Read
9215	Meter #2 Forward Average DP	4 Inferred	Read
9217	Meter #2 Forward Average Temperature	1 Inferred	Read
9219	Meter #2 Forward Average Pressure	1 Inferred	Read
9221	Meter #2 Forward Average **Observed Density	3 Inferred	Read
9223	Meter #2 Forward Average Dens.Temperature	1 Inferred	Read
9225	Meter #2 Forward Average LB/FT3.b	3 Inferred	Read
9227	Meter #2 Forward Average Y Factor	6 Inferred	Read
9229	Meter #2 Forward Average Fa Factor	6 Inferred	Read
9231	Meter #2 Forward Average K/CD/MF	6 Inferred	Read
9233	Meter #2 Forward Average CTL	5 Inferred	Read
9235	Meter #2 Forward Average CPL	5 Inferred	Read
9237	Meter #2 GROSS Flow Rate	2 Inferred	Read
9239	Meter #2 NET Flow Rate	2 Inferred	Read
9241	Meter #2 MASS Flow Rate	2 Inferred	Read
9243	Meter #2 CTPL	4 Inferred	Read
9245	Meter #2 DP	5 Inferred	Read
9247	Meter #2 Temperature	1 Inferred	Read
9249	Meter #2 Pressure	1 Inferred	Read
9251	Meter #2 **Observed Density LB/FT3	3 Inferred	Read
9253	Meter #2 Densitometer Temperature	1 Inferred	Read
9255	Meter #2 LB/FT3.b	3 Inferred	Read
9257	Meter #2 Y Factor	6 Inferred	Read
9259	Meter #2 Fa Factor	6 Inferred	Read
9261	Meter #2 K/CD/MF	6 Inferred	Read
9263	Meter #2 Observed GM/CC	6 Inferred	Read
9265	Meter #2 CTL Factor	5 Inferred	Read
9267	Meter #2 CPL Factor	5 Inferred	Read
9269	Meter #2 Equilibrium Pressure	3 Inferred	Read
9271	Meter #2 Observed API	1 Inferred	Read
9273	Meter #2 Observed SG	4 Inferred	Read
9275	Meter #2 Reverse Batch GROSS	1 Inferred	Read
9277	Meter #2 Reverse Batch NET	1 Inferred	Read
9279	Meter #2 Reverse Batch MASS	2 Inferred	Read
9281	Meter #2 Reverse Average CTPL	5 Inferred	Read
9283	Meter #2 Reverse Average DP	4 Inferred	Read
9285	Meter #2 Reverse Average Temperature	1 Inferred	Read
9287	Meter #2 Reverse Average Pressure	1 Inferred	Read
9289	Meter #2 Reverse Avg **Observed Dens LB/FT3	3 Inferred	Read
9291	Meter #2 Reverse Average Dens.Temperature	1 Inferred	Read
9293	Meter #2 Reverse Average LB/FT3.b	3 Inferred	Read
9295	Meter #2 Reverse Average Y Factor	6 Inferred	Read
9297	Meter #2 Reverse Average Fa Factor	6 Inferred	Read
9299	Meter #2 Reverse Average K/CD/MF	6 Inferred	Read

Modbus Address Table – 2x16 Bits Integer

ADDRESS	DESCRIPTION	DECIMAL	READ/WRITE
9301	Meter #2 Reverse Average CTL	5 Inferred	Read
9303	Meter #2 Table used	0 Inferred	Read
9305	Meter #2 Unit of Measurement	0 Inferred	Read
9307	Meter #2 Reverse Average CPL	5 Inferred	Read
9309	Meter #2 Reverse Average Observed GM/CC	6 Inferred	Read
9311	Meter #2 Forward Average Observed GM/CC	6 Inferred	Read
9313	Meter #2 Meter Factor	6 Inferred	Read
9315	Meter #2 Linear Factor	6 Inferred	Read
9317	Meter #2 Forward FWA Observed SG	4 Inferred	Read
9319	Meter #2 Forward FWA SG@60	4 Inferred	Read
9321	Meter #2 Reverse FWA Observed SG	4 Inferred	Read
9323	Meter #2 Reverse FWA SG@60	4 Inferred	Read
9325	Meter #2 Reverse Cum GROSS	1 Inferred	Read
9327	Meter #2 Reverse Cum NET	1 Inferred	Read
9329	Meter #2 Reverse Cum MASS	2 Inferred	Read
9331	Meter #2 Forward Average Density LB/FT3	3 Inferred	Read
9333	Meter #2 Forward Cum GROSS	1 Inferred	Read
9335	Meter #2 Forward Cum NET	1 Inferred	Read
9337	Meter #2 Forward Cum MASS	2 Inferred	Read
9339	Meter #2 Reverse Average Density LB/FT3	3 Inferred	Read
9341	Meter #2 Table Used	0 Inferred	Read
9343	Meter #2 Batch Number	0 Inferred	Read
9345	Meter #2 Batch Start Date	0 Inferred	Read
9347	Meter #2 Batch Start Time	0 Inferred	Read
9349-9351	Reserved		
9353	Meter #2 Product Used	0 Inferred	Read
9355	Meter #2 Unit of Measurement	0 Inferred	Read
9357-9364	Meter #2 Product ID	16 Chars.	Read
9365-9368	Meter #2 ID	8 Chars.	Read
9369	Meter #2 Pipe ID Inches	5 Inferred	Read
9371	Meter #2 Orifice ID Inches	5 Inferred	Read
9373	Meter #2 Density Correction Factor	5 Inferred	Read
9375	Meter #2 CTL	5 Inferred	Read
9377	Meter #2 CPL	5 Inferred	Read
9379	Meter #2 Equilibrium Pressure	3 Inferred	Read
9381	Meter #2 Observed API	1 Inferred	Read
9383	Meter #2 Observed SG	4 Inferred	Read
9385	Meter #2 SG@60	4 Inferred	Read
9387	Meter #2 K Factor	3 Inferred	Readr
9389	Meter #2 Forward CD/LMF Factor	6 Inferred	Read
9391	Meter #2 Reverse CD/LMF Factor	6 Inferred	Read
9393	Meter #2 Forward Cumulative Net Total	0 Inferred	Read
9395	Meter #2 Forward Cumulative Mass Total	1 Inferred	Read
9397	Meter #2 Reverse Cumulative Net Total	0 Inferred	Read
9399	Meter #2 Reverse Cumulative Mass Total	1 Inerred	Read
9401	Spare#1 Data	4 Inferred	Read
9403	Spare#2 Data	4 Inferred	Read
9405	Meter #1 Density LB/CF	3 Inferred	Read
9407	Meter #2 Density LB/CF	3 Inferred	Read

Modbus Address Table – 2x16 Bits Integer

ADDRESS	DESCRIPTION	DECIMAL	READ/WRITE
9475	Multivariable DP	4 Inferred	Read
9477	Spare		
9479	Multivariable Pressure	1 Inferred	Read
9481	Spare		
9483	Multivariable Temperauter	2 Inferred	Read
9485	Spare		

Modbus Address Table – 2x16 Bits Integer

ADDRESS	DESCRIPTION	DECIMAL	READ/WRITE
Forward/Reverse Flow Rate Data Area (Version 6.11.08 or above)			
9631	Meter #1 Forward GROSS Flow Rate	2 Inferred	Read
9633	Meter #1 Forward NET Flow Rate	2 Inferred	Read
9635	Meter #1 Forward MASS Flow Rate	2 Inferred	Read
9637	Meter #1 Reverse GROSS Flow Rate	2 Inferred	Read
9639	Meter #1 Reverse NET Flow Rate	2 Inferred	Read
9641	Meter #1 Reverse MASS Flow Rate	2 Inferred	Read
9643	Meter #2 Forward GROSS Flow Rate	2 Inferred	Read
9645	Meter #2 Forward NET Flow Rate	2 Inferred	Read
9647	Meter #2 Forward MASS Flow Rate	2 Inferred	Read
9649	Meter #2 Reverse GROSS Flow Rate	2 Inferred	Read
9651	Meter #2 Reverse NET Flow Rate	2 Inferred	Read
9653	Meter #2 Reverse MASS Flow Rate	2 Inferred	Read
9655	Station Forward GROSS Flow Rate	2 Inferred	Read
9657	Station Forward NET Flow Rate	2 Inferred	Read
9659	Station Forward MASS Flow Rate	2 Inferred	Read
9661	Station Reverse GROSS Flow Rate	2 Inferred	Read
9663	Station Reverse NET Flow Rate	2 Inferred	Read
9665	Station Reverse MASS Flow Rate	2 Inferred	Read

Alarm and Audit Trail Data

Previous Data Alarm Area

Set last alarm status request (3030) to 1. (3030, 16bits Integer, Write only)
4001-4009 (2x16 bits, Read only)

4001 last alarm date mmddyy
4003 last alarm time hhmmss
4005 last alarm flag - IDx1000000 + CODE x10000 +ACODEx100 +STATUS
4007 last alarm meter #1 cum.gross total (1 decimal inferred)
4009 last alarm meter #2 cum. gross total (1 decimal inferred)

Last Alarm Flag

ID	CODE	ACODE	STATUS

ID

0	Analog Input #1	17	Event Status	31	Slave#1 Comm.
1	Analog Input #2	18	Calibration Mode	32	Slave#2 Comm.
2	Analog Input #3	20	Multi.Var#1 DP	33	Slave#3 Comm.
3	Analog Input #4	21	Multi.Var#1 Pressurer	34	Slave#4 Comm.
4	RTD Input	22	Multi.Var#1 Temperature		
9	Densitometer	23	Multi.Var#2 DP	41 – Analog Input #5	
5	Analog Output#1	24	Multi.Var#2 Pressure	42 – Analog Input #6	
6	Analog Output#2	25	Multi.Var#2 Temperature	43 – Analog Input #7	
7	Analog Output#3	80	Battery	44 – Analog Input #8	
8	Analog Output#4	11	Meter#1	45 – Analog Input #9	
10	Densitometer	12	Meter#2		

CODE (Only For ID=Meter#1, ID=Meter#2)

1	Flow	6	Batch Preset
2	Gravity Out of Range	7	Down
3	Calculation Temp Out of Range	8	Start
4	ALPHA T Out of Range	9	API2565 Out of Range
5	Batch Preset Warning	10	D.Calc(Nist14/PPMIX) Out Range

ACODE

Given in one hexadecimal byte (HEX 00): (in binary bit7, bit6, bit5, bit4, bit3, bit2, bit1, bit0

Bit **6** = :	0	1 meter configuration
	1	2 meters configuration
Bit **4** = :	0	Meter #2 Flow in Forward Direction
	1	Meter #2 Flow in Reverse Direction
Bit **0** = :	0	Meter #1 Flow in Forward Direction
	1	Meter #1 Flow in Reverse Direction

STATUS

0	ID = 10:	FAILED OK
	ID = 5,6,7,8:	OVERRANGE OK
		Then STATUS - OK

1	HI
2	LO
4	FAILED
5	OVERRANGE

Example: Last Alarm Flag – (Hex:A8EA33, Decimal:11070003)
ID= 11, CODE=7,ACODE=0, STATUS=3 -> METER #1 DOWN

Previous Alarm Data Area Ends

Previous Audit Data Area

Set last audit data request (3031) to 1. (3031, 16bits Integer, Write only)
8493-8499 are only available for version 6.08.2 or above (2x16 bits Integers, Read only)

8493 Meter #2 Cum. Net Total (1 decimal inferred)
8495 Meter #2 Cum Mass Total (2 decimal inferred)
8497 Meter #1 Cum. Net Total (1 decimal inferred)
8499 Meter #1 Cum Mass Total (2 decimal inferred)

8501 Last Audit Date mmddyy
8503 Last Audit Time hhmmss
8505 Old Value (Decimal Inferred in the 4th byte of 8513)
8507 New Vaule(Decimal Inferred in the 4th byte of 8513)
8509 Meter #1 Cum. Gross Total (1 decimal inferred)
8511 Meter #2 Cum Gross Total (1 decimal inferred)
8513 Code Flag

Code Flag

Config Code	No.	Audit Code	Old/New Value Decimal Inferred

Config Code

in binary – bit7, bit6, bit5, bit4, bit3, bit2, bit1, bit0

bit **6** = :	0	1 meter configuration
	1	2 meters configuration
bit **4** = :	0	Meter #2 Flow in Forward Direction
	1	Meter #2 Flow in Reverse Direction
bit **0** = :	0	Meter #1 Flow in Forward Direction
	1	Meter #1 Flow in Reverse Direction

NO.

The following table is only for audit code is less than 200
Value 0 : this field is not used.

1	Meter #1
2	Meter #2
11	Product #1
12	Product #2
13	Product #3
14	Product #4
15	Product #5
16	Product #6
17	Product #7
18	Product #8
19	Product #9
20	Product #10
21	Product #11
22	Product #12
23	Product #13
24	Product #14
25	Product #15
26	Product #16

45	Analog Output #1
46	Analog Output #2
47	Analog Output #3
48	Analog Output #4

Audit Codes

1	DP Cut Off
2	DP High Switch Percentage
3	Equilibrium Pressure Override
4	Gravity Override
5	Alpha T Override

150	Common Temperature
151	Common Pressure
152	Station Type
153	Flow Rate Display
154	Calculation Type

6	Pipe ID
7	Orifice ID
8	API Override
9	SG Override
10	Density Override
11	Alpha T E-6 Override
12	Ratio of Heat
13	Viscosity
14	Pipe Thermal
15	Orifice Thermal
16	Reference Temperature of Pipe
17	Reference Temperature of Orifice
18	K Factor
19	Meter Factor
20	Reverse Meter Factor
30	DP Low @4mA
31	DP Low @20mA
32	DP Maintenance
33	DP High @4mA
34	DP High @20mA
35	Temperature @4mA
36	Temperature @20mA
37	Temperature Maintenance
38	Pressure @4mA
39	Pressure @20mA
40	Pressure Maintenance
41	Density/Gravity @4mA
42	Density/Gravity @20mA
43	Density/Gravity Maintenance
44	Dens. Temperature @4mA
45	Dens.Temperature @20mA
46	Dens.Temperature Maintenance
50	Spare #1 @4mA
51	Spare #1 @20mA
52	Spare #1 Maintenance
53	Spare #2 @4mA
54	Spare #2 @20mA
55	Spare #2 Maintenance
56	Analog Output Limit @4mA
57	Analog Output Limit@20mA
58	Density Correction Factor
59	GM/CC Conversion Factor
60	N/A
61	Atmospheric Pressure PSIA
62	Pulse Output #1 Volume
63	Pulse Output #2 Volume
221	Analog Input #5 Calibration Data
222	Analog Input #6 Calibration Data
223	Analog Input #7 Calibration Data

155	Y Factor Select
156	Tap Select 0=Flange,1=Pipe
157	Use Stack DP 0=No, 1=Yes
158	Densitometer Type
159	Density Unit
160	Use Meter Temp as Dens. Temp
161	Day Start Hour
162	Disable Alarms
163	Batch Type
164	N/A
165	DP Low Assignment
166	Temperature Assignment
167	Pressure Assignment
168	Densitometer Assignment
169	Dens.Temperature Assignment
170	DP High Assignment
171	Spare#1 Assignment
172	Spare#2 Assignment
173	DP Low Fail Code
174	Temperature Fail Code
175	Pressure Fail Code
176	Densitometer Fail Code
177	Dens. Temp Fail Code
178	Spare#1 Fail Code
179	Spare#2 Fail Code
180	*****SEE NOTE (next page)**
181	Flow Cut Off Hertz
182	Dens.Pressure Assignment
184	Use Meter Press as Dens.Press
185	Densitometer Pressure Fail Code
190	Densitometer Pressure 4mA
191	Densitometer Pressure 20mA
192	Densitometer Press. Maintenance
193	Mass Units
201	Analog Input #1 Calibration Data
202	Analog Input #2 Calibration Data
203	Analog Input #3 Calibration Data
204	Analog Input #4 Calibration Data
205	RTD Input Calibration Data
206	Analog Output #1 Calibration Data
207	Analog Output #2 Calibration Data
208	Analog Output #3 Calibration Data
209	Analog Output #4 Calibration Data
211	Multivar.#1 DP Calibration Data
212	Multivar.#1 PF Calibration Data
213	Multivar.#1 TF Calibration Data
214	Multivar.#2 DP Calibration Data
215	Multivar.#2 PF Calibration Data
216	Multivar.#2 TF Calibration Data
224	Analog Input #8 Calibration Data
225	Analog Input #9 Calibration Data

8501 **Last Audit Date mmddyy**
00 00 C8 C8 (Hex), 051400 (Digit) – May 14, 2000

8503 **Last Audit Time hhmmss**
00 03 0d 40 (Hex), 200000(Digit) – 8 PM

8505 **Old Value (Decimal Inferred in the 4th byte of 8113)**
00 01 86 a0 (Hex) 100000 (Digit)
4th byte of 8113 = 5 (Decimal Places)
result = 1.00000

8507 **New Vaule(Decimal Inferred in the 4th byte of 8113)**
00 01 ad b0 (Hex) 110000 (Digit)
4th byte of 8113 = 5 (Decimal Places)
Rsult = 1.10000

8509 **Meter #1 Cum Mass Total** – 1 decimal inferred
00 00 01 F4 (Hex), 500 (Digit)
Result = 50.0

8511 **Meter #1 Cum Mass Total –1** decimal inferred
00 00 01 F4 (Hex), 500 (Digit)
Result = 50.0

8513 **Code Flag**

40 26 3a 05 in Hex
1st Byte – Config Code in Binary 01000000 – bit 6 is on (2 Meters Configuration)
2nd Byte – NO 26 (Hex) 38 (Digit) Meter#2 Density,
3rd Byte – Audit Code – 3A(Hex) 58 (Digit) – Density Correction Factor
4th Byte – Decimal Places – 05(Hex) – 5 Decimal Places

NOTE:

When Audit Code = 180, then the following Modbus Addresses store the parameters indicated.

8501 System Start Date

8503 System Start Time

8505 System Failed Date

8507 System Failed Time

8509 Not Used

8511 Not Used

Previous Audit Data Area Ends

Current Alarm Status

4 Bytes in Hex - FF FF FF FF

METER#1: MODBUS ADDRESS 9497

METER#2: MODBUS ADDRESS 9499

The Current Alarm Status is a 4-byte string that resides at **Modbus address 9497 for Meter #1** and **Modbus address 9499 for Meter #2**. The alarm status codes are the same for both meters.

01	00	00	00	Flow Rate High (Freq.Device Gross Flow)
02	00	00	00	Flow Rate Low (Freq.Device Gross Flow)
04	00	00	00	Temperature Assignment High
08	00	00	00	Temperature Assignment Low
10	00	00	00	Pressure Assignment High
20	00	00	00	Pressure Assignment Low
40	00	00	00	Gravity/Density Assignment High
80	00	00	00	Gravity/Density Assignment Low
00	01	00	00	Dens.Temperature Assignment High
00	02	00	00	Dens.Temperature Assignment Low
00	04	00	00	DP Used Assignment High
00	08	00	00	DP Used Assignment Low
00	10	00	00	Densitometer Failed
00	20	00	00	Densitometer Failed
00	40	00	00	Dens.Pressure Assign High
00	80	00	00	Dens.Pressure Assign Low
00	00	00	01	Down
00	00	00	02	SG Out of Range
00	00	00	04	Temperature Out of Range
00	00	00	08	Alpha T Out of Range
00	00	00	10	Batch Preset Warning
00	00	00	20	Batch Preset
00	00	00	40	API Out of Range
00	00	00	80	D.Calc (Nist14 or PPMIX) Out of Range

OTHER ALARMS (MODBUS ADDRESS 9495)

4 Bytes in Hex - FF FF FF FF

01	00	00	00	Analog Output #1 Overrange
02	00	00	00	Analog Output #2 Overrange
04	00	00	00	Analog Output #3 Overrange
08	00	00	00	Analog Output #4 Overrange
10	00	00	00	Spare #1 Assignment High
20	00	00	00	Spare #1 Assignment Low
40	00	00	00	Spare #2 Assignment High
80	00	00	00	Spare #2 Assignment Low
00	02	00	00	Event Status ON
00	04	00	00	Calibration Mode ON
00	08	00	00	Battery Alarm
00	00	01	00	Slave Unit #1 Comm. Failed
00	00	02	00	Slave Unit #2 Comm. Failed
00	00	04	00	Slave Unit #3 Comm. Failed
00	00	08	00	Slave Unit #4 Comm. Failed

Current Alarms Status Section Ends

INPUT ASSIGNMENTS

1 – Analog Input #1
2 – Analog Input #2
3 – Analog Input #3
4 – Analog Input #4
5 – RTD
10 – Multi.Variable

ADDRESS	DESCRIPTION	
2146	Meter #1 DP Used	
2798	Meter #1 DP Low Assignment	
2799	Meter #1 Temperature Assignment	
2800	Meter #1 Pressure Assignment	
2801	Meter #1 Density Assignment	
2802	Meter #1 Dens.Temperature Assignment	
2803	Meter #1 DP High Assignment	
2943	Meter #1 Dens. Pressure Assignment	
2147	Meter #2 DP Used	
2804	Meter #2 DP Low Assignment	
2805	Meter #2 Temperature Assignment	
2806	Meter #2 Pressure Assignment	
2807	Meter #2 Density Assignment	
2808	Meter #2 Dens.Temperature Assignment	
2809	Meter #2 DP High Assignment	
2944	Meter #2 Dens. Pressure Assignment	
2810	Spare #1 Assignment	
2811	Spare #2 Assignment	
2841-2844	Analog Input #1 TAG ID	8 Chars.
2845-2848	Analog Input #2 TAG ID	8 Chars.
2849-2852	Analog Input #3 TAG ID	8 Chars.
2853-2856	Analog Input #4 TAG ID	8 Chars.
2857-2860	RTD TAG ID	8 Chars.
2861-2864	Densitometer TAG ID	8 Chars
2865-2868	Analog Output #1 TAG ID	8 Chars
2869-2872	Analog Output #2 TAG ID	8 Chars
2873-2876	Analog Output #3 TAG ID	8 Chars
2877-2880	Analog Output #4 TAG ID	8 Chars
2961-2964	Multi.Var.DP TAG ID	8 Chars
2965-2968	Multi.Var.Pressure TAG ID	8 Chars
2969-2972	Multi.Var.Temperature TAG ID	8 Chars.

Modbus Address Table - Floating Point

ADDRESS	DESCRIPTION	READ/WRITE
7001	Meter#1 Sarasota Constant D0	Read/Write
7002	Meter#1 Sarasota Constant T0	Read/Write
7003	Meter#1 Sarasota Constant K	Read/Write
7004	Meter#1 Sarasota Constant Temperature Coeff.	Read/Write
7005	Meter#1 Sarasota Constant Temperature Cal.	Read/Write
7006	Meter#1 Sarasota Constant Pressure Coeff.	Read/Write
7007	Meter#1 Sarasota Constant Pressure Cal.	Read/Write
7008	Meter#1 UGC Constant K0	Read/Write
7009	Meter#1 UGC Constant K1	Read/Write
7010	Meter#1 UGC Constant K2	Read/Write
7011	Meter#1 UGC Constant KT	Read/Write
7012	Meter#1 UGC Constant Temperature Cal	Read/Write
7013	Meter#1 UGC Constant K	Read/Write
7014	Meter#1 UGC Constant P0	Read/Write
7015	Meter#1 Solartron Constant K0	Read/Write
7016	Meter#1 Solartron Constant K1	Read/Write
7017	Meter#1 Solartron Constant K2	Read/Write
7018	Meter#1 Solartron Constant K18	Read/Write
7019	Meter#1 Solartron Constant K19	Read/Write
7020	Meter#1 Solartron Constant K20A	Read/Write
7021	Meter#1 Solartron Constant K20B	Read/Write
7022	Meter#1 Solartron Constant K21A	Read/Write
7023	Meter#1 Solartron Constant K21B	Read/Write
7024	Meter#1 Solartron Constant KR	Read/Write
7025	Meter#1 Solartron Constant KJ	Read/Write
7026	Meter#2 Sarasota Constant D0	Read/Write
7027	Meter#2 Sarasota Constant T0	Read/Write
7028	Meter#2 Sarasota Constant K	Read/Write
7029	Meter#2 Sarasota Constant Temperature Coeff.	Read/Write
7030	Meter#2 Sarasota Constant Temperature Cal.	Read/Write
7031	Meter#2 Sarasota Constant Pressure Coeff.	Read/Write
7032	Meter#2 Sarasota Constant Pressure Cal.	Read/Write
7033	Meter#2 UGC Constant K0	Read/Write
7034	Meter#2 UGC Constant K1	Read/Write
7035	Meter#2 UGC Constant K2	Read/Write
7036	Meter#2 UGC Constant KT	Read/Write
7037	Meter#2 UGC Constant Temperature Cal	Read/Write
7038	Meter#2 UGC Constant K	Read/Write
7039	Meter#2 UGC Constant P0	Read/Write
7040	Meter#2 Solartron Constant K0	Read/Write
7041	Meter#2 Solartron Constant K1	Read/Write
7042	Meter#2 Solartron Constant K2	Read/Write
7043	Meter#2 Solartron Constant K18	Read/Write
7044	Meter#2 Solartron Constant K19	Read/Write
7045	Meter#2 Solartron Constant K20A	Read/Write
7046	Meter#2 Solartron Constant K20B	Read/Write
7047	Meter#2 Solartron Constant K21A	Read/Write
7048	Meter#2 Solartron Constant K21B	Read/Write
7049	Meter#2 Solartron Constant KR	Read/Write
7050	Meter#2 Solartron Constant KJ	Read/Write

Modbus Address Table – Floating Point

ADDRESS	DESCRIPTION	READ/WRITE
7051	Meter#1 Calc. Viscosity	Read
7052	Meter#2 Calc. Viscosity	Read
7053-7060		
7061	Prog.Var 7791	Read
7062	Prog.Var 7792	Read
7063	Prog.Var 7793	Read
7064	Prog.Var 7794	Read
7065	Prog.Var 7795	Read
7066	Prog.Var 7796	Read
7067	Prog.Var 7797	Read
7068	Prog.Var 7798	Read
7069	Prog.Var 7799	Read
7070	Prog.Var.7800	Read
7071	Previous Hour - Prog.Var.7776	Read
7072	Previous Hour - Prog.Var.7777	Read
7073	Previous Hour - Prog.Var.7778	Read
7074	Previous Hour - Prog.Var.7779	Read
7075	Previous Hour - Prog.Var.7780	Read
7076	Previous Day - Prog.Var.7781	Read
7077	Previous Day - Prog.Var.7782	Read
7078	Previous Day - Prog.Var.7783	Read
7079	Previous Day - Prog.Var.7784	Read
7080	Previous Day - Prog.Var.7785	Read
7081	Previous Batch - Prog.Var.7786	Read
7082	Previous Batch - Prog.Var.7787	Read
7083	Previous Batch - Prog.Var.7788	Read
7084	Previous Batch - Prog.Var.7789	Read
7085	Previous Batch - Prog.Var.7790	Read

Slave Unit Registers (7086-7095)

7086	Variable#1	Read/Write
7087	Variable#2	Read/Write
7088	Variable#3	Read/Write
7089	Variable#4	Read/Write
7090	Variable#5	Read/Write
7091	Variable#6	Read/Write
7092	Variable#7	Read/Write
7093	Variable#8	Read/Write
7094	Variable#9	Read/Write
7095	Variable#10	Read/Write

Modbus Address Table – Floating Point

ADDRESS	DESCRIPTION	READ/WRITE
Current Data Area– Meter #1		
7101	Meter #1 Forward Average DP	Read
7102	Meter #1 Forward Average Temperature	Read
7103	Meter #1 Forward Average Pressure	Read
7104	Meter #1 Forward Average Density LB/FT3	Read
7105	Meter #1 Forward Average Dens.Temperature	Read
7106	Meter #1 Forward Average LB/FT3.b	Read
7107	Meter #1 Forward Average Y Factor	Read
7108	Meter #1 Forward Average FA Factor	Read
7109	Meter #1 Forward Average CD/MF	Read
7110	Meter #1 Forward Average CTL	Read
7111	Meter #1 Forward Average CPL	Read
7112	Meter #1 GROSS Flow Rate	Read
7113	Meter #1 NET Flow Rate	Read
7114	Meter #1 MASS Flow Rate	Read
7115	Spare	
7116	Meter #1 DP	Read
7117	Meter #1 Temperature	Read
7118	Meter #1 Pressure	Read
7119	Meter #1 Density LB/FT3	Read
7120	Meter #1 Densitometer Temperature	Read
7121	Meter #1 LB/FT3.b	Read
7122	Meter #1 Y Factor	Read
7123	Meter #1 FA Factor	Read
7124	Meter #1 CD/MF Factor	Read
7125	Meter #1 CTL Factor	Read
7126	Meter #1 CPL Factor	Read
7127	Meter #1 Equilibrium Pressure	Read
7128	Meter #1 Reverse Average DP	Read
7129	Meter #1 Reverse Average Temperature	Read
7130	Meter #1 Reverse Average Pressure	Read
7131	Meter #1 Reverse Average Density LB/FT3	Read
7132	Meter #1 Reverse Average Dens.Temperature	Read
7133	Meter #1 Reverse Average LB/FT3.b	Read
7134	Meter #1 Reverse Average Y Factor	Read
7135	Meter #1 Reverse Average FA Factor	Read
7136	Meter #1 Reverse Average CD/MF	Read
7137	Meter #1 Reverse Average CTL	Read
7138	Meter #1 Forward Average CPL	Read
7139	Meter #1 Pipe ID	Read
7140	Meter #1 Orifice ID	Read
7141	Meter #1 Density Correction Factor	Read
7142	Meter #1 K Factor	Read
7143	Meter #1 GM/CC	Read
7144	Meter #1 Reverse Average GM/CC	Read
7145	Meter #1 Forward Average GM/CC	Read
7146	Meter #1 API	Read
7147	Meter #1 SG	Read
7148	Meter #1 SG@60	Read
7149	Meter #1 Calc.Density	Read
7150	Meter #1 Calc.Density.b	Read
7151	Meter #1 Gross Volume (Second)	Read
7152	Meter #1 Net Volume (Second)	Read

Modbus Address Table – Floating Point

ADDRESS	DESCRIPTION	READ/WRITE
7153	Meter #1 Mass Volume (Second)	Read

Historical Batch/Daily Data Area – Meter #1

3026 =Last Daily Report Request *(16 bits Integer, Write only)*
Set last daily report request to 1.

3027 =Last Batch Request *(16 bits Integer, Write only)*
Set last batch request to 1

7201-7203	Spare	Read
7204	Meter #1 Forward Average DP	Read
7205	Meter #1 Forward Average Temperature	Read
7206	Meter #1 Forward Average Pressure	Read
7207	Meter #1 Forward Average Density LB/FT3	Read
7208	Meter #1 Forward Average Density Temp	Read
7209	Meter #1 Forward Average LB/FT3.b	Read
7210	Meter #1 Forward Average Y Factor	Read
7211	Meter #1 Forward Average FA Factor	Read
7212	Meter #1 Forward Average CD/MF Factor	Read
7213	Meter #1 Forward Average GM/CC	Read
7214	Meter #1 Forward Average CTL	Read
7215	Meter #1 Forward Average CPL	Read
7216	Meter #1 Reverse Average DP	Read
7217	Meter #1 Reverse Average Temperature	Read
7218	Meter #1 Reverse Average Pressure	Read
7219	Meter #1 Reverse Average Density LB/FT3	Read
7220	Meter #1 Reverse Average Density Temp	Read
7221	Meter #1 Reverse Average LB/FT3.b	Read
7222	Meter #1 Reverse Average Y Factor	Read
7223	Meter #1 Reverse Average FA Factor	Read
7224	Meter #1 Reverse Average CD/MF Factor	Read
7225	Meter #1 Reverse Average GM/CC	Read
7226	Meter #1 Reverse Average CTL	Read
7227	Meter #1 Reverse Average CPL	Read
7228	Meter #1 Pipe ID	Read
7229	Meter #1 Orifice ID	Read
7230	Meter #1 Dens.Corr.Factor	Read
7231	Meter #1 K Factor	Read
7232	Spare Data #1	Read
7233	Spare Data #2	Read
7234	Program Variable#1	Read
7235	Program Variable#2	Read
7236	Program Variable#3	Read
7237	Program Variable#4	Read
7238	Program Variable#5	Read
7239-7240	Spare	

Modbus Address Table – Floating Point

ADDRESS	DESCRIPTION	READ/WRITE

Historical Hourly Data Area – Meter #1

3029 =	Last Hourly Report Request (*(16 bits Integer, Write only)*	
Set last hourly report request to 1=Latest, 32=Oldest		
7241	Meter #1 Forward Average DP	Read
7242	Meter #1 Forward Average Temperature	Read
7243	Meter #1 Forward Average Pressure	Read
7244	Meter #1 Forward Average Density LB/FT3	Read
7245	Meter #1 Forward Average Dens.Temperature	Read
7246	Meter #1 Forward Average LB/FT3.b	Read
7247	Meter #1 Forward Average Y Factor	Read
7248	Meter #1 Forward Average FA Factor	Read
7249	Meter #1 Forward Average CD/MF	Read
7250	Meter #1 Forward Average CTL	Read
7251	Meter #1 Forward Average CPL	Read
7252	Meter #1 GROSS Flow Rate	Read
7253	Meter #1 NET Flow Rate	Read
7254	Meter #1 MASS Flow Rate	Read
7255	Spare	
7256	Meter #1 DP	Read
7257	Meter #1 Temperature	Read
7258	Meter #1 Pressure	Read
7259	Meter #1 Density LB/FT3	Read
7260	Meter #1 Densitometer Temperature	Read
7261	Meter #1 LB/FT3.b	Read
7262	Meter #1 Y Factor	Read
7263	Meter #1 FA Factor	Read
7264	Meter #1 CD/MF Factor	Read
7265	Meter #1 CTL Factor	Read
7266	Meter #1 CPL Factor	Read
7267	Meter #1 Equilibrium Pressure	Read
7268	Meter #1 Reverse Average DP	Read
7269	Meter #1 Reverse Average Temperature	Read
7270	Meter #1 Reverse Average Pressure	Read
7271	Meter #1 Reverse Average Density LB/FT3	Read
7272	Meter #1 Reverse Average Dens.Temperature	Read
7273	Meter #1 Reverse Average LB/FT.b	Read
7274	Meter #1 Reverse Average Y Factor	Read
7275	Meter #1 Reverse Average FA Factor	Read
7276	Meter #1 Reverse Average CD/MF	Read
7277	Meter #1 Reverse Average CTL	Read
7278	Meter #1 Forward Average CPL	Read
7279	Meter #1 Pipe ID	Read
7280	Meter #1 Orifice ID	Read
7281	Meter #1 Density Correction Factor	Read
7282	Meter #1 Reverse Average GM/CC	Read
7283	Meter #1 Forward Average GM/CC	Read
7284	Meter #1 GM/CC	Read
7285	Meter #1 K Factor	Read

Modbus Address Table – Floating Point

ADDRESS	DESCRIPTION	READ/WRITE
Current Data Area– Meter #2		
7301	Meter #2 Forward Average DP	Read
7302	Meter #2 Forward Average Temperature	Read
7303	Meter #2 Forward Average Pressure	Read
7304	Meter #2 Forward Average Density LB/FT3	Read
7305	Meter #2 Forward Average Dens.Temperature	Read
7306	Meter #2 Forward Average LB/FT3.b	Read
7307	Meter #2 Forward Average Y Factor	Read
7308	Meter #2 Forward Average FA Factor	Read
7309	Meter #2 Forward Average CD/MF	Read
7310	Meter #2 Forward Average CTL	Read
7311	Meter #2 Forward Average CPL	Read
7312	Meter #2 GROSS Flow Rate	Read
7313	Meter #2 NET Flow Rate	Read
7314	Meter #2 MASS Flow Rate	Read
7315	Spare	
7316	Meter #2 DP	Read
7317	Meter #2 Temperature	Read
7318	Meter #2 Pressure	Read
7319	Meter #2 Density LB/FT3	Read
7320	Meter #2 Densitometer Temperature	Read
7321	Meter #2 LB/FT3.b	Read
7322	Meter #2 Y Factor	Read
7323	Meter #2 FA Factor	Read
7324	Meter #2 CD/MF Factor	Read
7325	Meter #2 CTL Factor	Read
7326	Meter #2 CPL Factor	Read
7327	Meter #2 Equilibrium Pressure	Read
7328	Meter #2 Reverse Average DP	Read
7329	Meter #2 Reverse Average Temperature	Read
7330	Meter #2 Reverse Average Pressure	Read
7331	Meter #2 Reverse Average Density LB/FT3	Read
7332	Meter #2 Reverse Average Dens.Temperature	Read
7333	Meter #2 Reverse Average LB/FT3.b	Read
7334	Meter #2 Reverse Average Y Factor	Read
7335	Meter #2 Reverse Average FA Factor	Read
7336	Meter #2 Reverse Average CD/MF	Read
7337	Meter #2 Reverse Average CTL	Read
7338	Meter #2 Forward Average CPL	Read
7339	Meter #2 Pipe ID	Read
7340	Meter #2 Orifice ID	Read
7341	Meter #2 Density Correction Factor	Read
7342	Meter #2 K Factor	Read
7343	Meter #2 GM/CC	Read
7344	Meter #2 Reverse Average GM/CC	Read
7345	Meter #2 Forward Average GM/CC	Read
7346	Meter #2 API	Read
7347	Meter #2 SG	Read
7348	Meter #2 SG@60	Read
7349	Meter #2 Calc.Density	Read
7350	Meter #2 Calc.Density.b	Read
7351	Meter #2 Gross Volume (Second)	Read
7352	Meter #2 Net Volume (Second)	Read
7353	Meter #2 Mass Volume (Second)	Read

Modbus Address Table – Floating Point

ADDRESS	DESCRIPTION	READ/WRITE

Historical Batch/Daily Data Area – Meter #2

3026 =Last Daily Report Request (16 bits Integer, Write only)
Set last daily report request to 1=Latest.
3027 =Last Batch Request (16 bits Integer, Write only)
Set last batch request to 1=Latest,32=Oldtest

7401-7403	Sapre	
7404	Meter #2 Forward Average DP	Read
7405	Meter #2 Forward Average Temperature	Read
7406	Meter #2 Forward Average Pressure	Read
7407	Meter #2 Forward Average LB/FT3	Read
7408	Meter #2 Forward Average Density Temp	Read
7409	Meter #2 Forward Average LB/FT3.b	Read
7410	Meter #2 Forward Average Y Factor	Read
7411	Meter #2 Forward Average FA Factor	Read
7412	Meter #2 Forward Average CD/MF Factor	Read
7413	Meter #2 Forward Average GM/CC	Read
7414	Meter #2 Forward Average CTL	Read
7415	Meter #2 Forward Average CPL	Read
7416	Meter #2 Reverse Average DP	Read
7417	Meter #2 Reverse Average Temperature	Read
7418	Meter #2 Reverse Average Pressure	Read
7419	Meter #2 Reverse Average LB/FT3	Read
7420	Meter #2 Reverse Average Density Temp	Read
7421	Meter #2 Reverse Average LB/FT3.b	Read
7422	Meter #2 Reverse Average Y Factor	Read
7423	Meter #2 Reverse Average FA Factor	Read
7424	Meter #2 Reverse Average CD/MF Factor	Read
7425	Meter #2 Reverse Average GM/CC	Read
7426	Meter #2 Reverse Average CTL	Read
7427	Meter #2 Reverse Average CPL	Read
7428	Meter #2 Pipe ID	Read
7429	Meter #2 Orifice ID	Read
7430	Meter #2 Dens.Corr.Factor	Read
7431	Meter #2 K Factor	Read
7432	Spare Data #1	Read
7433	Spare Data #2	Read
7433-7440	Spare	

Modbus Address Table – Floating Point

ADDRESS	DESCRIPTION	READ/WRITE

Historical Hourly Data Area – Meter #2

3029 = Last Hourly Report Request (16 bits Integer,Write only)

Set last hourly report request to 1=Latest, 32= Oldest.

7441	Meter #2 Forward Average DP	Read
7442	Meter #2 Forward Average Temperature	Read
7443	Meter #2 Forward Average Pressure	Read
7444	Meter #2 Forward Average LB/FT3	Read
7445	Meter #2 Forward Average Dens.Temperature	Read
7446	Meter #2 Forward Average LB/FT3.b	Read
7447	Meter #2 Forward Average Y Factor	Read
7448	Meter #2 Forward Average FA Factor	Read
7449	Meter #2 Forward Average CD/MF	Read
7450	Meter #2 Forward Average CTL	Read
7451	Meter #2 Forward Average CPL	Read
7452	Meter #2 GROSS Flow Rate	Read
7453	Meter #2 NET Flow Rate	Read
7454	Meter #2 MASS Flow Rate	Read
7455	Spare	
7456	Meter #2 DP	Read
7457	Meter #2 Temperature	Read
7458	Meter #2 Pressure	Read
7459	Meter #2 Density LB/FT3	Read
7460	Meter #2 Densitometer Temperature	Read
7461	Meter #2 LB/FT3.b	Read
7462	Meter #2 Y Factor	Read
7463	Meter #2 FA Factor	Read
7464	Meter #2 CD/MF Factor	Read
7465	Meter #2 CTL Factor	Read
7466	Meter #2 CPL Factor	Read
7467	Meter #2 Equilibrium Pressure	Read
7468	Meter #2 Reverse Average DP	Read
7469	Meter #2 Reverse Average Temperature	Read
7470	Meter #2 Reverse Average Pressure	Read
7471	Meter #2 Reverse Average Density LB/FT3	Read
7472	Meter #2 Reverse Average Dens.Temperature	Read
7473	Meter #2 Reverse Average LB/FT3.b	Read
7474	Meter #2 Reverse Average Y Factor	Read
7475	Meter #2 Reverse Average FA Factor	Read
7476	Meter #2 Reverse Average CD/MF	Read
7477	Meter #2 Reverse Average CTL	Read
7478	Meter #2 Forward Average CPL	Read
7479	Meter #2 Pipe ID	Read
7480	Meter #2 Orifice ID	Read
7481	Meter #2 Density Correction Factor	Read
7482	Meter #2 Reverse Average GM/CC	Read
7483	Meter #2 Forward Average GM/CC	Read
7484	Meter #2 GM/CC	Read
7485	Meter #2 K Factor	Read

Modbus Address Table – Floating Point

ADDRESS DESCRIPTION READ/WRITE

Programmable Floating Point Variables

Hourly Report – 7776–7780, (Read/Write) 5 variables will be reset at the end of hour.
Daily Report – 7781–7785, (Read/Write) 5 variables will be reset at the end of day.
Batch Report – 7786–7790, (Read/Write) 5 variables will be reset at the end of batch.
Display Variable – 7791–7798(Read/Write). 7791-7795 will be stored in the 'snap shot' report
Slave Unit Variables – 7086-7095 (Floating Point), **5081-5099** (Long Integer)
Scratch Pad for Floating Point Variables – 7801-7830

7071-7075 – Last Hour Program Variables (Read Only)
7076-7080 – Last Day Program Variables (Read Only)

CHAPTER 6: Installation Drawings

Explosion-Proof Installation Drawings

REVISIONS				
REV	DESCRIPTION	CHG. NO.	APP'D	DATE
AA				

12. INSTALLATION TO BE IN ACCORDANCE WITH NATIONAL ELECTRICAL CODE.

9. NON-INCENDIVE FIELD WIRING METHODS MAY BE USED FOR CONNECTING THE TEMPERATURE SENSING ASSEMBLY. WHEN USING NON-INCENDIVE FIELD WIRING, THE CONNECTION HEAD AND TEMPERATURE SENSOR ASSEMBLY NEED NOT BE EXPLOSION PROOF, BUT ALL COMPONENTS CONNECTED TO THE TEMP SENSOR CONNECTOR MUST BE CLASSIFIED "SIMPLE APPARATUS". SIMPLE APPARATUS ARE DEVICES WHICH ARE INCAPABLE OF GENERATING OR STORING MORE THAN 1.2V, 0.1A, 25MW, OR 20uJ (RTD'S QUALIFY AS SIMPLE APPARATUS).

8. DIVISION 2 WIRING METHOD.

6. CLASS II INSTALLATIONS MUST USE A CSA APPROVED DUST-INGITIONPROOF SENSOR.

5. IN AMBIENTS GREATER THAN 40°C, SPRING LOADED TEMPERATURE SENSORS USED WITHOUT AN EXPLOSION PROOF THERMOWELL MUST BE RATED FOR AT LEAST 85°C.

4. COMPONENTS REQUIRED TO BE APPROVED MUST BE FOR GAS GROUP APPROPIATE TO AREA CLASSIFICATION.

3. ALL CONDUITS THREADS TO BE ASSEMBLED WITH FIVE FULL THREADS MINIMUM.

2. TRANSMITTER MUST NOT BE CONNECTED TO EQUIPMENT GENERATING MORE THAN 250VAC.

1. WIRING METHOD SUITABLE FOR CLASS I, DIV 1, ANY LENGTH.

UNLESS OTHERWISE SPECIFIED DIMENSIONS IN INCHES [mm]. REMOVE ALL BURRS AND SHARP EDGES. MACHINE SURFACE FINISH 125	CONTRACT NO.	DYNAMIC FLUID MEASUREMENT, INC.	12603 SOUTHWEST FWY, SUITE 320 STAFFORD, TX 77477
	DR. C. SIADO	TITLE: MODEL MICROMV AND ECHART EXPLOSIONPROOF INSTALLATION DRAWING, FACTORY MUTUAL	
-TOLERANCE- .X = .1 [2.5] .XX = .02 [0.5] .XXX = .010[0.25] FRACTIONS = 1/32 ANGLES = 2°	CHK'D		
	APP'D. S. HALILAH	SIZE A / FSCM NO / DWG NO. CONN-DRW-12	
DO NOT SCALE PRINT	APP'D. GOVT.	SCALE / WT. / SHEET 1 OF 3	

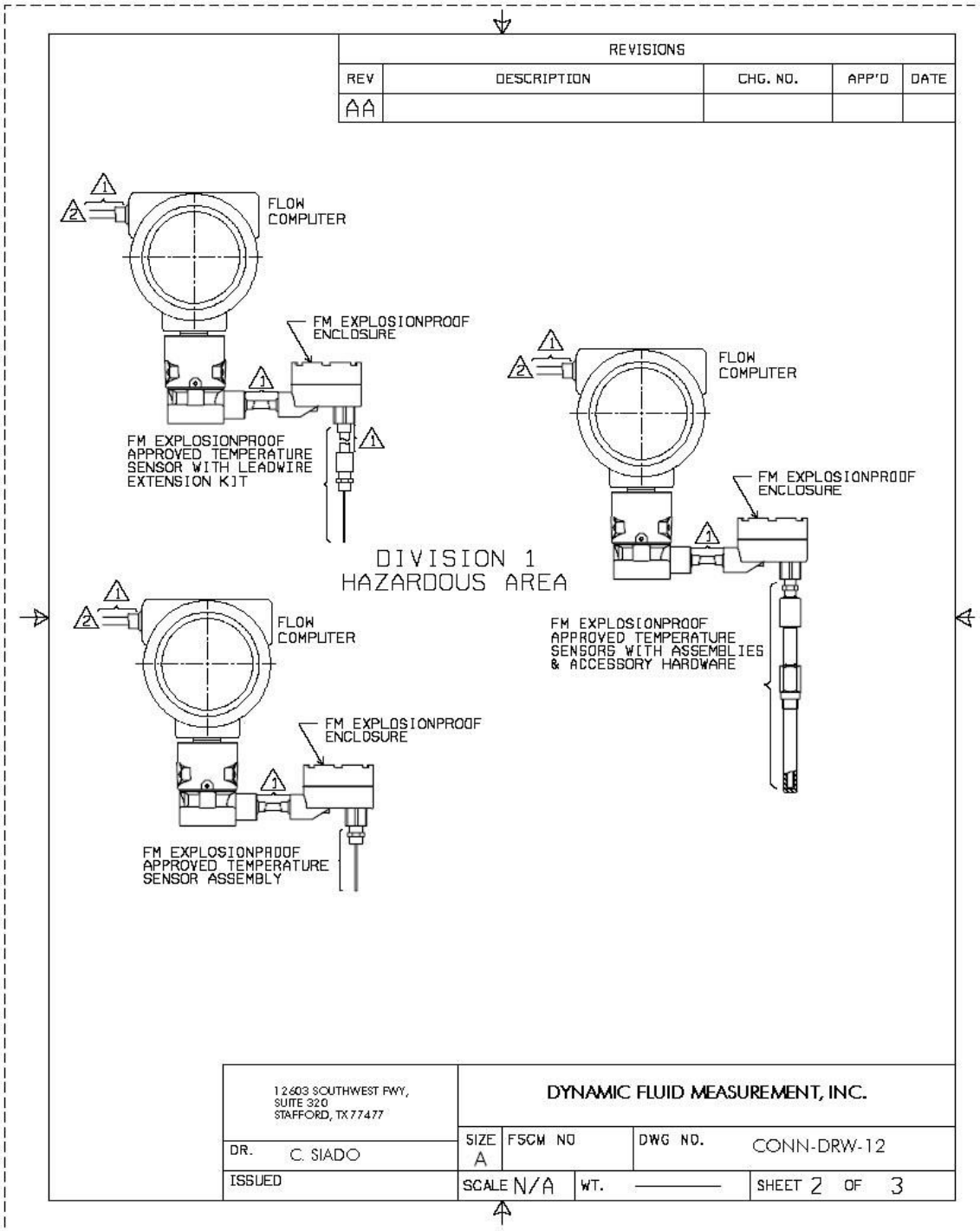
REVISIONS
REV
DESCRIPTION
CHG. NO.
APP'D
DATE
AA
FLOW COMPUTER
FM EXPLOSIONPROOF ENCLOSURE
FM EXPLOSIONPROOF APPROVED TEMPERATURE SENSOR WITH LEADWIRE EXTENSION KIT
DIVISION 1 HAZARDOUS AREA
FLOW COMPUTER
FM EXPLOSIONPROOF ENCLOSURE
FM EXPLOSIONPROOF APPROVED TEMPERATURE SENSORS WITH ASSEMBLIES & ACCESSORY HARDWARE
FLOW COMPUTER
FM EXPLOSIONPROOF ENCLOSURE
FM EXPLOSIONPROOF APPROVED TEMPERATURE SENSOR ASSEMBLY
12603 SOUTHWEST FWY, SUITE 320 STAFFORD, TX 77477
DYNAMIC FLUID MEASUREMENT, INC.
DR. C. SIADO
SIZE A
FSCM NO
DWG NO. CONN-DRW-12
ISSUED
SCALE N/A
WT.
SHEET 2 OF 3

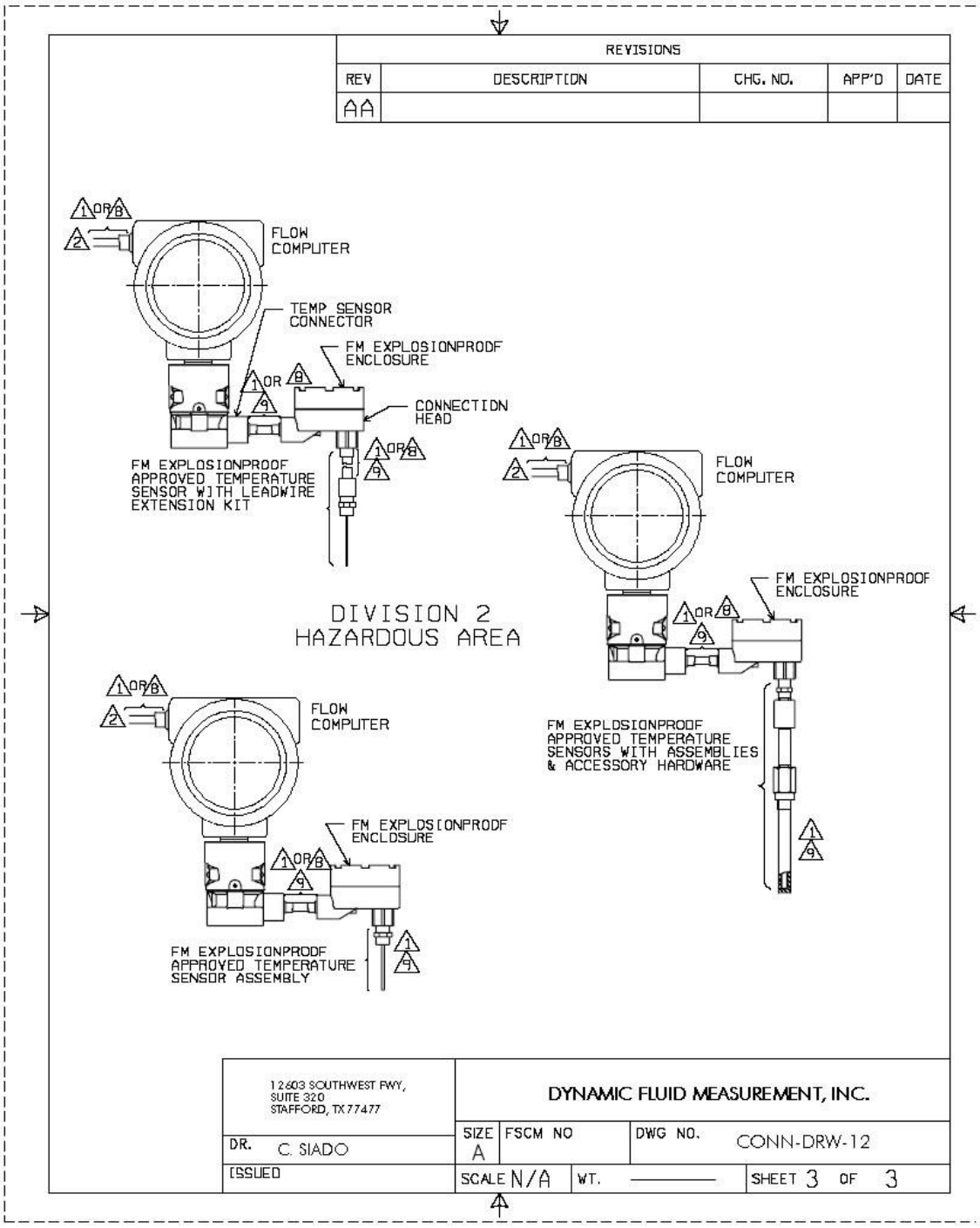
REVISIONS
REV
DESCRIPTION
CHG. NO.
APP'D
DATE
AA
FLOW COMPUTER
TEMP SENSOR CONNECTOR
FM EXPLOSIONPRODF ENCLOSURE
CONNECTION HEAD
FM EXPLOSIONPRODF APPROVED TEMPERATURE SENSOR WITH LEADWIRE EXTENSION KIT
DIVISION 2 HAZARDOUS AREA
FLOW COMPUTER
FM EXPLOSIONPRODF ENCLOSURE
FM EXPLOSIONPRODF APPROVED TEMPERATURE SENSORS WITH ASSEMBLIES & ACCESSORY HARDWARE
FLOW COMPUTER
FM EXPLOSIONPRODF ENCLOSURE
FM EXPLOSIONPRODF APPROVED TEMPERATURE SENSOR ASSEMBLY
12603 SOUTHWEST FWY, SUITE 320 STAFFORD, TX 77477
DYNAMIC FLUID MEASUREMENT, INC.
DR. C. SIADO
SIZE A
FSCM NO
DWG NO. CONN-DRW-12
ISSUED
SCALE N/A
WT.
SHEET 3 OF 3

Manifold Installation Drawings

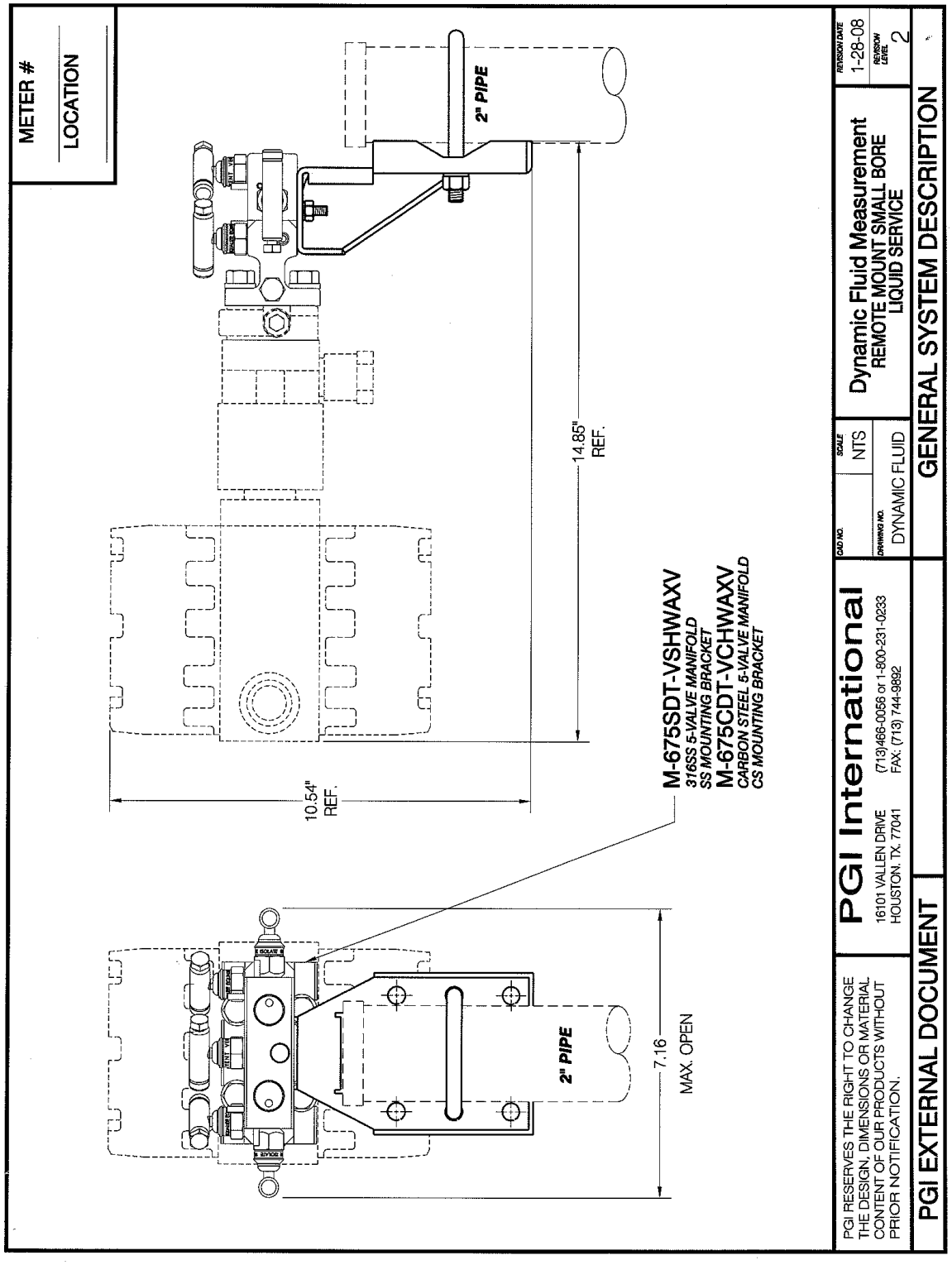

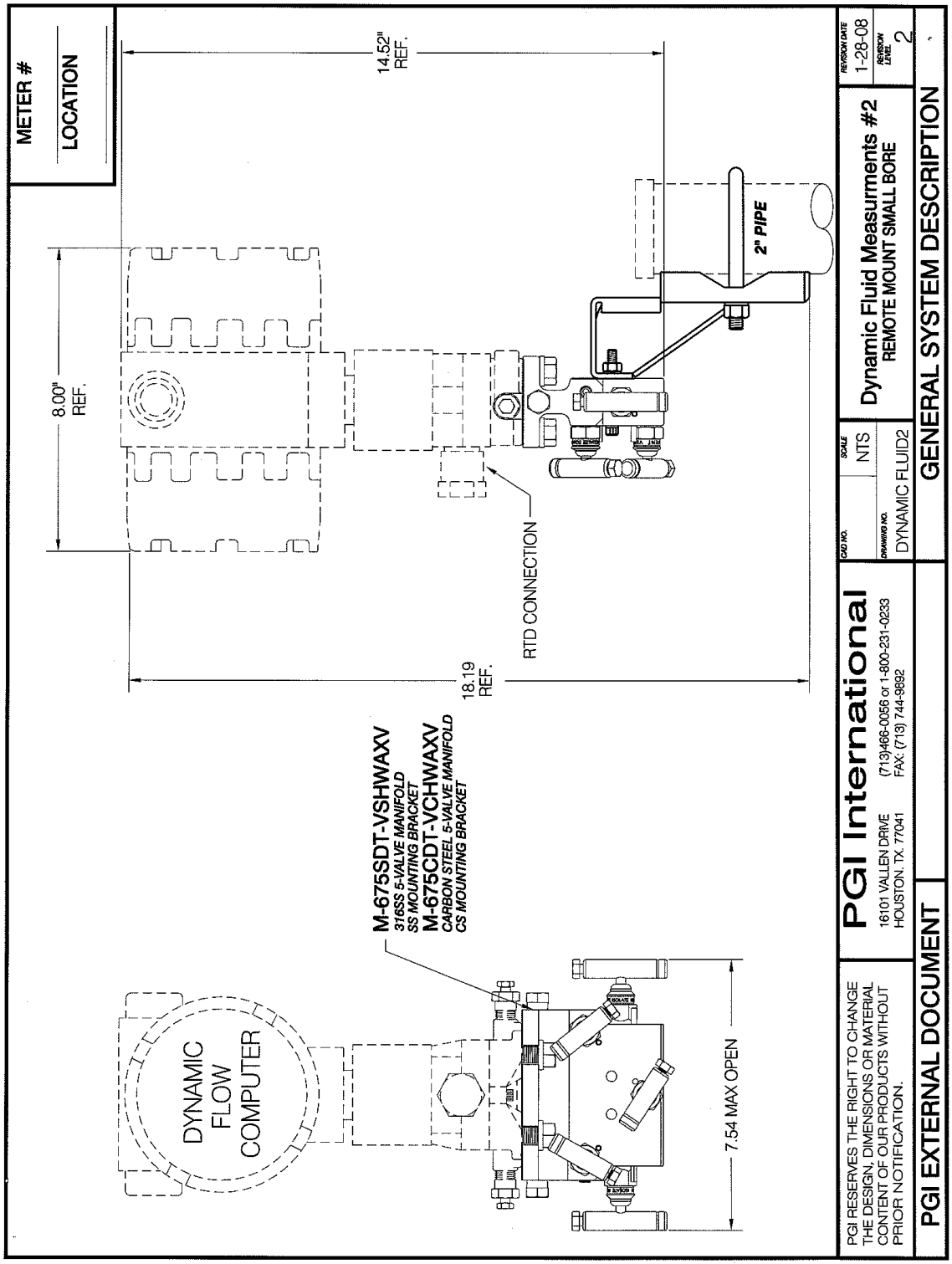
METER #
LOCATION
14.52" REF.
8.00" REF.
2" PIPE
RTD CONNECTION
18.19 REF.
M-675SDT-VSHWAXV
316SS 5-VALVE MANIFOLD
SS MOUNTING BRACKET
M-675CDT-VCHWAXV
CARBON STEEL 5-VALVE MANIFOLD
CS MOUNTING BRACKET
DYNAMIC FLOW COMPUTER
7.54 MAX OPEN
PGI International
16101 VALLEN DRIVE
HOUSTON, TX. 77041
(713)466-0056 or 1-800-231-0233
FAX: (713) 744-9892
CAD NO.
DRAWING NO.
DYNAMIC FLUID2
SCALE
NTS
Dynamic Fluid Measurments #2
REMOTE MOUNT SMALL BORE
REVISION DATE
1-28-08
REVISION LEVEL
2
GENERAL SYSTEM DESCRIPTION
PGI RESERVES THE RIGHT TO CHANGE THE DESIGN, DIMENSIONS OR MATERIAL CONTENT OF OUR PRODUCTS WITHOUT PRIOR NOTIFICATION.
PGI EXTERNAL DOCUMENT

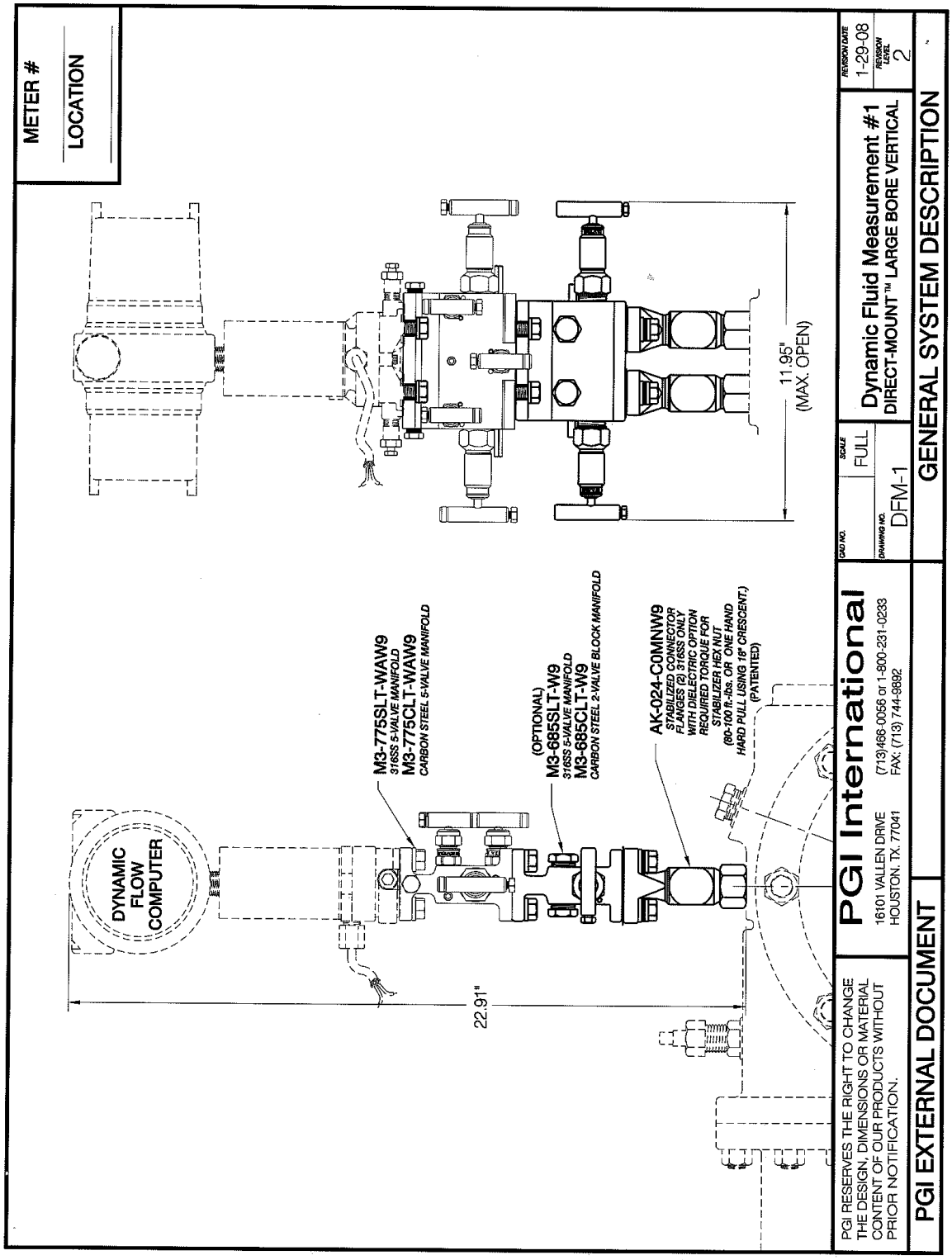
METER #
LOCATION
11.95"
(MAX. OPEN)
DYNAMIC
FLOW
COMPUTER
M3-775SLT-WAW9
316SS 5-VALVE MANIFOLD
M3-775CLT-WAW9
CARBON STEEL 5-VALVE MANIFOLD
(OPTIONAL)
M3-685SLT-W9
316SS 5-VALVE MANIFOLD
M3-685CLT-W9
CARBON STEEL 2-VALVE BLOCK MANIFOLD
AK-024-C0MNW9
STABILIZED CONNECTOR
FLANGES (2) 316SS ONLY
WITH DIELECTRIC OPTION
REQUIRED TORQUE FOR
STABILIZER HEX NUT
(80-100 ft.-lbs. OR ONE HAND
HARD PULL USING 18" CRESCENT.)
(PATENTED)
22.91"
PGI RESERVES THE RIGHT TO CHANGE
THE DESIGN, DIMENSIONS OR MATERIAL
CONTENT OF OUR PRODUCTS WITHOUT
PRIOR NOTIFICATION.
PGI International
16101 VALLEN DRIVE
HOUSTON, TX. 77041
(713)466-0056 or 1-800-231-0233
FAX: (713) 744-9892
CAD NO.
DRAWING NO.
DFM-1
SCALE
FULL
Dynamic Fluid Measurement #1
DIRECT-MOUNT™ LARGE BORE VERTICAL
REVISION DATE
1-29-08
REVISION LEVEL
2
PGI EXTERNAL DOCUMENT
GENERAL SYSTEM DESCRIPTION

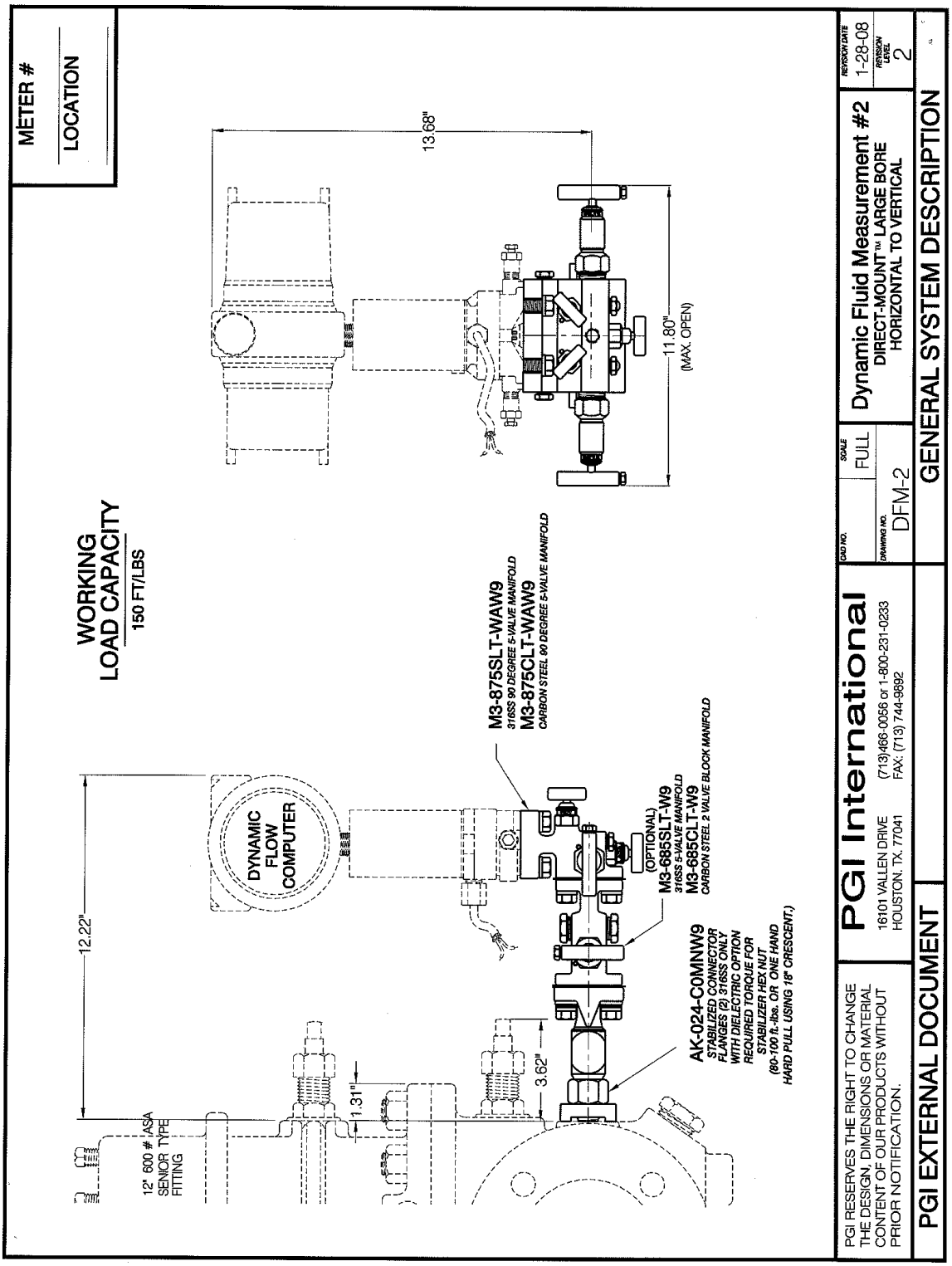
METER #
LOCATION
WORKING
LOAD CAPACITY
150 FT/LBS
13.68"
11.80"
(MAX. OPEN)
M3-875SLT-WAW9
316SS 90 DEGREE 5-VALVE MANIFOLD
M3-875CLT-WAW9
CARBON STEEL 90 DEGREE 5-VALVE MANIFOLD
DYNAMIC
FLOW
COMPUTER
12.22"
(OPTIONAL)
M3-685SLT-W9
316SS 5-VALVE MANIFOLD
M3-685CLT-W9
CARBON STEEL 2 VALVE BLOCK MANIFOLD
AK-024-COMNW9
STABILIZED CONNECTOR
FLANGES (2) 316SS ONLY
WITH DIELECTRIC OPTION
REQUIRED TORQUE FOR
STABILIZER HEX NUT
(60-100 ft.-lbs. OR ONE HAND
HARD PULL USING 18" CRESCENT.)
3.62"
1.31"
12" 600 # ASA
SENIOR TYPE
FITTING
PGI RESERVES THE RIGHT TO CHANGE
THE DESIGN, DIMENSIONS OR MATERIAL
CONTENT OF OUR PRODUCTS WITHOUT
PRIOR NOTIFICATION.
PGI International
16101 VALLEN DRIVE
HOUSTON, TX. 77041
(713)466-0056 or 1-800-231-0233
FAX: (713) 744-9892
CAD NO.
DRAWING NO.
DFM-2
SCALE
FULL
Dynamic Fluid Measurement #2
DIRECT-MOUNT™ LARGE BORE
HORIZONTAL TO VERTICAL
REVISION DATE
1-28-08
REVISION LEVEL
2
PGI EXTERNAL DOCUMENT
GENERAL SYSTEM DESCRIPTION